CONTENTS

Section

Welcome.

Congratulations on your purchase of an Auto-Sleeper motorhome. We are confident it will give you many years of pleasure.

This handbook has been compiled to enable you to obtain the maximum pleasure from your vehicle. It contains the appliance instructions along with advice on safety matters.

Please read this Handbook thoroughly so that you are conversant with all the motorhome systems, operating instructions and precautions.

Failure to observe these recommendations or precautions may result in incorrect operation of equipment and subsequent risk to occupants.

Information leaflets and literature on safe operation of appliances and equipment fitted to your motorhome are included in the Auto-Sleeper Customer Pack. Please read these carefully prior to use.

Should you experience any difficulties contact your dealer who will be pleased to offer advise.

It is the policy of Peugeot and Auto-Sleeper to continually improve their vehicles, so whilst the details contained in this Handbook are correct at the time of going to press, they reserve the right to alter the specifications at any time without notice.

Auto-Sleeper motorhomes offer a variety of customer uses and whilst each vehicle features the optimum storage, fluid, seating and sleeping capabilities, it is the customer's responsibility to select the proper combinations of loads without exceeding weight capacities.

Your Auto-Sleeper motorhome conforms to the European standard of EN 1646.

Model

This Handbook covers the Stratford, based on the Peugeot Boxer 333 L2 H2 medium wheelbase high roof window van.

Gas System

This handbook is for use on vehicles with a 30mbar gas system. The gas system pressure is noted on a label in the gas locker.

Conversion Type

Van conversion with an end lounge which converts into a double bed.

Climatic Conditions

The motorhome is designed for use in temperate climates, and is certified Grade 1 in accordance with EN 1646-1: 2004., indicating an effective heating system is fitted but has not been tested for thermal performance.

Handbook

Any queries should be addressed to your Auto-Sleeper dealer.

Appliance Instructions

The appliance instructions included have been extracted from those supplied from the appliance manufacturers.

Automotive - Peugeot

For all automotive matters you should refer to the Peugeot vehicle instructions manual. This includes tyre pressures, referring to the type of tyres fitted.

The Auto-Sleeper conversion does not affect the tyre pressures in any way as it is built within the design envelope of the base vehicle.

IMPORTANT:

In the interests of safety, replacements parts for appliances must conform to the manufacturer's specification and should be fitted by them or an authorised agent.

Your Auto-Sleeper conforms to the CEN Standard EN1646-1/2004 for habitation requirements relating to Health and Safety.

To deal with your queries efficiently, always quote your vehicle's production number which can be found in the glove compartment.

Please read and complete the warranty registration card supplied with your vehicle; and return to the address below, without delay.

Auto-Sleepers Limited,
Orchard Works,
Willersey,
Nr Broadway,
Worcestershire
WR12 7QF
Tele: 01386 853338
Fax: 01386 858343
E-mail: aftersales@auto-sleepers.co.uk

Statement

Auto-Sleepers Limited (hereinafter called “the Company”) hereby guarantees the body conversion of the motorhome against failure arising through defects in workmanship or material under normal use and service for a period of two years from the date of purchase or registration whichever is the earliest. Subject to the limitations and conditions specified the Company will, during the warranty period, repair free of charge any defects which arise in the conversion part of the motorhome and which are found on inspection to result from faulty workmanship or materials.

Condition

The benefit of this warranty shall apply only to the Purchaser, including those subject to hire purchase or credit sale agreements, and can be transferred at a cost of £50 plus VAT to subsequent owners until it expires. Note that this is not the case with the optional third year warranty package taken out at the time of purchase the transfer of which is subject to a charge.

It is a condition of this Warranty that the motorhome is delivered to an authorised dealer or distributor of the Company (or the Company’s factory at the Company’s discretion) for inspection and afterwards collected from there at the expense of the Purchaser.

This warranty does not extend to faults attributable to wear and tear or to defects repaired by or on the instructions of the Purchaser without first obtaining the Company’s written authorisation. Faults attributable to wilful damage, negligence, abnormal conditions and failure to follow the Company’s instructions (whether oral or in writing), misuse or alteration are excluded. Ancillary equipment i.e. awnings, bicycle racks, aerials etc are not covered by this warranty.

This warranty does not apply to a motorhome that has been subject to overloading or otherwise misused or has not been maintained in accordance with the Company’s recommendations contained in the handbook.

This warranty applies only to the body conversion and does not cover any failure or defect in the chassis or engine.

Where, under the terms of this warranty a replacement item is supplied the conditions of the warranty shall apply to that item for the remaining period of the original warranty term covering the defective part.

It is a condition of this warranty that the Purchaser shall notify an authorised dealer or distributor of the Company of the model, type, and job number of the vehicle and provide details of the alleged defect within 14 days of its discovery.

It is a condition of this warranty that the conversion warranty is subject to an annual Habitation Check, carried out by an authorised dealer.

Any disagreement between the Company and the Purchaser as to the interpretation of this warranty shall be referred for determination to an independent arbitrator to be appointed by mutual agreement or in the event of no agreement by the Society of Motor Manufacturers and Traders.

This warranty is valid only in the European Union and the Company’s distributors, dealers or agents have no authority to vary its terms. **The card must be received within 14 days of registration for the warranty to be active.**

This warranty becomes valid only when the Company has received the completed registration card.

The Purchaser’s attention is drawn to the Motor Manufacturers Warranty that covers the chassis, body and engine of the motorhome.

The Purchaser’s attention is also drawn to the fact that these terms and conditions do not affect the Purchaser’s statutory rights.

BODY CONSTRUCTION:

Peugeot Boxer L2 H2 window van.

Body paint colours:

- White
- Metallic Silver
- Volcano Red
- Clipper Blue
- Horizon Yellow
- Silverstone Green

Floor Vinyl: Dark Wood Block.

Furniture: Linneman Cherry.

Furniture fittings: Chrome.

Work Surfaces and Table finish: Minstrel.

Carpet: Oasis Madrid.

Curtains, Cushions/Upholstery: Phoenix, various colours.

Exterior Graphics: BS1781.

THE COUNTRY & COASTAL CODES

Upon arrival at your destination you should be aware of the Country Code relating to motorhome owners. This is entitled the *Motor Caravanners' Code.*

Code of Conduct - Camp Sites

Arrivals

- Report to reception immediately on arrival.

Vehicle Movement

- Keep to roadways unless otherwise directed.
- Adhere to speed limits. Note that these are generally 10 mph. (Remember that the stopping distance on grass is considerably greater than on tarmac).
- Only a person in possession of a current driving licence may drive on the site.
- Park correctly as advised on your pitch. Where possible leave 20ft of free space around your vehicle.

Use of Site

- Use the electrical mains hook-up in the correct manner and with caution.
- Ensure that all fresh water taps/ connections are turned off after use.
- Have care and consideration when using all facilities (toilets and showers etc.) and leave them clean and tidy. Young children should be escorted.

To avoid possible damage to sewage purification works, only approved chemical fluids must be used. Under no circumstances may coal tar, phenol or caustic-based fluids be used. Disposable napkins and similar bulky items must not be put into chemical closet emptying points but should be wrapped in a polythene bag and placed in the container provided. (Put all litter in containers marked for the purpose).

Noise

- Do not make excessive noise.
- Children should be restrained from making excessive noise.
- Flying kites and model aircraft and the use of items like catapults or air-guns as well as ball games should not be permitted among, or close to, motorhomes.
- Musical instruments, record players, radios and televisions should not be used to the inconvenience of other people on site.
- Open and close doors quietly.
- Power generators must be adequately silenced and used with consideration and according to restricted site times.

Dogs and Pets

- All dogs and other pets should be kept under control.
- Unless permission has been granted, no animal should be allowed loose on the site and leads must not exceed 10ft.
- No animal should be allowed in the shower/toilet blocks.
- Do not let dogs foul the site.

Fire Precautions

Adhere to and make note of all fire precautions concerning the whereabouts of the fire points.

Although not compulsory, it is recommended that a 1 kg (2lb) dry powder fire extinguisher is carried. It should comply with BS 5423 and be marked BSI or FOC approved. It is important to check at regular intervals that the extinguisher is working as is required by types meeting BS 5423.

Careful thought is necessary for the positioning of the extinguisher, which should be near the door but not too close to the cooking equipment where sudden flames could make it unreachable. In the kitchen area, a fire blanket is a worthwhile precaution.

Unless permission has been granted, barbecues should not be used. When permission has been given, consideration should be given to the annoyance that can be caused to other users of the site. Open fires are not allowed.

Awnings and Tents

Awnings and tents should only be used when permission has been obtained.

When on grass and staying for more than a few days, the ground sheet and/or side flaps of awnings should be periodically raised in order to avoid damage to the ground.

Departure

- Leave the pitch clean and tidy.
- On leaving, check out with the reception paying the required dues.

Wild camping

Camping away from licensed sites, without the permission of the landowner or his agent, is not allowed in the United Kingdom. When permission has been granted, all aspects of this Code should be adhered to.

On no accounts should:

- Litter be disposed of other than in receptacles provided.
- Water be allowed to escape from the vehicle.
- Chemical toilets be emptied except into the disposal places agreed with the landowner.
- Washing or similar be hung outside the vehicle.

Parking

Motorhomes should only be parked in approved places.

When using the facilities of a motorhome at such times, care and consideration should be given to those around them.

Driving

When using a motorhome on either the public highway or private road, the Highway Code should be complied with and full consideration given to other road users.

In the event of a motorhome travelling slowly and there being a queue of traffic behind, the driver of the motorhome should, where possible, pull over in order to let the other traffic pass.

When the vehicle is in motion it is compulsory that all passengers are seated and seat restraint straps worn.

Before moving off, elevating roofs MUST be lowered and correctly secured, and top hinged windows closed. Likewise all doors and access lockers for gas containers and chemical toilets must be properly closed.

Exterior steps should be properly retracted and secured.

When the vehicle is being refuelled, or on a ferry, all gas systems must be turned off.

Gas appliances should only be used when the vehicle is in motion when the manufacturer of the appliance permits such use.

Handbook

Before using a motorhome all aspects of the handbooks produced by the chassis manufacturer and the converter must be read and adhered to.

Environment

Care and consideration should be taken to protect the environment.

Observe the Country and Coastal Codes shown below:

The Country Code

Enjoy the countryside but respect its life and work.

More people than ever before are exploring the countryside, interested in farming, plant life, bird watching or just observing the general wildlife. Whatever your interest, there is a lot to learn, but please observe the following code.

Guard against all risk of fires. Hay and heath land catch alight easily and once ablaze are very hard to put out. *Remember: Fire Spreads Quickly.*

- Keep to public paths across farmland.
- Use gates and stiles to cross fences, hedges and walls.
- Leave livestock, crops and machinery alone. View from a distance.
- Take your litter home - it is unsightly and harmful to wildlife.

- Help to keep all water clean.
- Take special care of country roads.
- Make no unnecessary noise. Most animals are very timid, noises can disturb them unnecessarily. If you want to get the best out of the country, go quietly.

The Coastal Code

As our coastlines are increasingly used for recreation and education, the following suggestions are made to enable us to enjoy our inheritance and preserve it for posterity.

- Do not trample about, or move rocks unnecessarily.
- Do not frighten seals or seabirds.
- Do not spear fish.
- Do not spill detergents, solvents or fuel from boats as these can kill marine life.
- When sailing, moderate your speed - the wash from a fast boat can destroy banks and nests.
- Live mollusks and crustaceans need not be collected as souvenirs - dead shells can usually be found.
- Shellfish can take years to grow and fines can be imposed for not observing national regulations.
- Do not pull up seaweed unnecessarily.
- Make your visit instructive - not destructive.
- Look at material, don’t remove it. Take notes and photographs, not specimens.
- Observe bye-laws and be considerate to others.
- National Trust property or Country Parks have regulations to protect the wildlife. Follow these.

Fire Precautions

You should also make yourself aware of the local fire regulations.

YOUR MOTORHOME (Weights explained)

Mass in Running Order (MRO)

The weight of your motorhome as it leaves the factory, as new with standard fixtures and fittings, plus an allowance for driver and 90% fuel.

Maximum Technically Permissible Laden Mass (MTPLM)

The maximum weight of the vehicle when fully laden for use on the road. See specification section for actual figure.

User Payload

The load margin (payload), this represents the difference between the Mass in Running Order (MRO) and the Maximum Technically Permissible Laden Mass (MTPLM). It shows the maximum weight which can be loaded into your motorhome, covering items such as food, crockery, cutlery, clothing, bedding, gas cylinders, etc. See Technical Specification for actual figure.

Please take care to ensure that you have allowed for the masses of all items you intend to carry in the motorhome, e.g.. passengers, optional equipment, essential habitation equipment and personal effects such as clothing, food, pets, bicycles etc.

Although there are additional seat belts within the motorhome, please refer to the stated number of passengers that are allowed due to the MRO and MTPLM.

LOADING AND DISTRIBUTION OF WEIGHT IN THE MOTORHOME

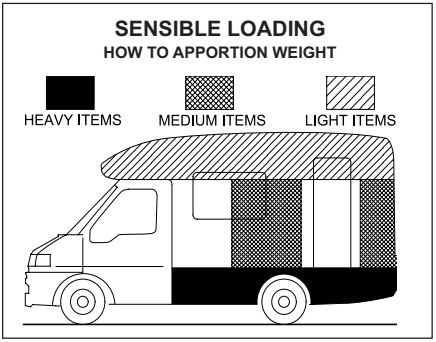

Loading

Correct weight distribution is a major factor in making your motorhome a balanced and pleasant vehicle to drive without compromising road-holding. Care should therefore be taken to ensure that heavy items are well spaced and are in as low a position as possible, for example, low cupboards and bed boxes.

DO NOT EXCEED THE STATED MAXIMUM LOAD. ITEMS FITTED OTHER THAN STANDARD EQUIPMENT WILL DEPLETE THE PAYLOAD STATED IN THIS HANDBOOK.

WARNING: Under no circumstances should the maximum permissible laden mass of the motorhome be exceeded.

Roof Loading

DO NOT ALLOW CHILDREN TO CLIMB ONTO THE ROOF.

Roof Rack Bars and Ladder (optional)

When using the optional roof rack, care should be taken to see that all the items are securely anchored. Apart from general cleaning and polishing, the roof rack and ladder require no special maintenance.

WARNING: Take special care when on the roof in wet or frosty weather conditions, which cause it to be particularly slippery.

Maximum load within the area encompassed

by the roof rack should not exceed 75 kgs (165 lbs) with a maximum loading of 8 kg (17 lbs) per square foot.

Before Moving Off

Whenever making a journey with your motorhome, either setting off on holiday or returning home, it is good practice to run through this simple checklist.

1. Close and secure all cupboards and drawers and check any loose articles. Do not store tins, bottles, etc. in overhead lockers.
2. Close and secure all windows and roof lights.
3. Leave all curtains and blinds open to aid visibility.
4. Check that gas cylinders are securely fastened and turn off all gas appliances, except those heating appliances designed to function while the vehicle is in motion. Also, ensure that the gas locker door is securely fastened.
5. Ensure that there is sufficient gas to meet your needs.
6. Switch off 230 volt supply at source, disconnect mains cable from vehicle. Beware of potential electric shock from wet cable. Coil cable and store in a safe place.
7. Check your RCD's/MCB's for operation.
8. Check and if necessary, charge the conversion battery.
9. Check battery selection switch is in the OFF position.
10. Check that the battery is secure and that the battery box lid is fastened.
11. Ensure the fridge is on 12V operation and door lock is set. (**Note:** the electrical relays will allow the fridge to be run on the vehicle battery when the engine is running.)
12. Remove any external fresh water connections etc.
13. Make sure any heavy articles are stored in accordance with the loading procedure. Tables should also be made secure.
14. Lock the motorhome exterior door (remember to take out your keys).
15. Check your external rear view mirrors and adjust if necessary.
16. Check that all corner steadies are wound up and that, if a step is used, it is put away before moving off.
17. Check wheel nuts are secure and tyre pressures are correct.
18. Ensure, if required, that your fresh water tank is full and your waste tank is empty.
19. Referring to your base vehicle manual, check all fluid levels including automotive fuel and tyre pressures. Remember to check that your spare tyre is of the recommended pressure.
20. Ensure that, on models fitted with an elevating roof, the roof is securely locked down with the exterior catches applied.
21. The fridge vent covers should be fitted when the vehicle is to be driven in order to comply with European Type Approval regulations for vehicle external projections.
22. Ensure that the toilet flush tank only contains a small amount of water (1-2 litres) in order to minimize the risk of leaks or spillage whilst the vehicle is in motion.
23. Check underneath the vehicle for stray items.
24. Safely store levelling blocks away in an appropriate place.

Pulling Off

Engage the clutch smoothly.

Avoid wear and tear on clutch and transmission by taking extra care.

Change gears smoothly.

Try not to jerk the clutch.

MOTORWAY DRIVING

Speed Limits (UK)

If a speed limit is not in force, your motorhome can be driven up to 70mph on motorways and dual carriageways.

1. Reduce Speed:
   i) In high or cross winds.
   ii) Downhill.
   iii) In poor visibility.
2. High sided vehicles cause air buffeting, so extra care must be taken when passing or being passed. As much space as possible should be given.

Motorway Handling

Do not bump the kerb with the wheels.

When passing other vehicles allow more than the normal clearance.

Allow longer to get up speed to pass.

Do not swing out suddenly.

Carry out all manoeuvres as smoothly as possible.

Use nearside wing mirror to check motorhome has cleared when overtaking.

Changing a Wheel

Refer to the vehicle handbook

WARNING: Ensure the wheel is of the same construction and size as the one that has been removed.

Jacking

Front and Rear - use the standard jacking points as per the base vehicle handbook.

Removing the Spare Wheel

CAUTION: Exercise care when lowering the wheel frame due to its weight.

Removal

a. The spare is located in under the rear of the vehicle.
b. The jack, handle and wheelbrace are contained in a toolroll which should be safely stored in one of the lowdown storage areas.
c. Follow the procedure for changing a wheel as described and illustrated in the base vehicle handbook.

Replacement of Spare Wheel

Follow the procedure as described in the base vehicle handbook.

Caravan Door Step

Your vehicle is fitted with an electrically operated side step. In the event of the step being left extended a buzzer, positioned under the dashboard, will sound (when the ignition is switched on) and the step will self-retract.

Cycle Rack

In the event of a cycle rack being fitted, the cycle rack when folded will increase the vehicle length by 400mm. Your Auto-Sleeper dealer will give further advice or assistance if required.

Whilst Driving

Whilst the vehicle is being driven ensure that:

- Both the passenger and driver wear seat belts - this is a legal requirement.
- Heavy loads are not stored in top cupboards or in areas from which they may become detached. Please ensure that heavy items are stored low down and take care not to overload individual wheels, the axles or the MTPLM.
- Table(s) are stowed in the correct position and table legs secured in their retaining clips.
- Furniture lids are lowered; cupboards and flaps are closed and secured.

- The refrigerator door is closed and secured by its travelling catch.
- The retractable rear step if fitted, is folded away or, if a separate step is supplied, it is safely stowed in the vehicle.
- Roof ventilators are closed and locked in the down position.
- The bathroom is not used whilst the vehicle is in motion. (Note: Refers only to models fitted with shower or toilet compartment).
- Top hinged windows are closed, and securely fastened.
- Children do not roam around the vehicle; they may fall and injure themselves.

Front Seat Swivel (where fitted)

Your vehicle may be fitted with a swivel base to either or both of the front seats, so that they may be turned to face the rear of the vehicle.

In order to release the swivel mechanism to allow the seat to rotate, grasp the release lever at the front of the seat and pull upwards. The lever is located on the right front corner of the passenger seat and the left corner of the driver's seat. (Note that the lever on the opposite front corner of each seat operates the back reclining mechanism. Only operate this lever whilst sat in the seat, in order to avoid sudden uncontrolled movement of the backrest).

WARNING: It is important that while the vehicle is in motion, any seat swivels are locked in the forward facing position.

Map Storage

In the rear of each cab seat there is a map pocket for storage of maps, periodicals and light items.

CHECK SITE REGULATIONS

Siting your Motorhome

When siting your motorhome, keep to the roadways unless otherwise directed. Obey the speed limit which, in general, is 10 mph. Only a person in possession of a current driving licence is permitted to drive on the site. Stopping distances on grass are considerably greater than on tarmac.

Selecting a Pitch

Carefully select where you wish to park your motorhome. The site should be as level as possible, well drained and away from boggy areas and, preferably, not under or near trees. Consider also, how you will move your motorhome when leaving the site. For example, on sloping ground in wet conditions, pitch facing downhill.

Levelling

It is important to site your motorhome level to ensure correct operation of the refrigeration, cooker, etc.

Awning Light

The exterior awning light is controlled by a switch on the panel above the side door.

SAFETY

Important: Your attention is drawn to the notice affixed in the motorhome advising on fire prevention, ventilation and what to do in case of fire.

Children

Do not leave children alone in the motorhome in any event, keep potentially dangerous items out of reach as at home. e.g. matches, drugs, etc.

WARNING: When upper bunks are used by children especially under six years of age care shall be taken against the risk of them falling out.

Fire Extinguishers

It is recommended that a 1 kg (2lb) minimum capacity dry powder fire extinguisher be located by the main exit door at all times.

A pan fire should not have an extinguisher aimed at it but be smothered with a fire blanket (which should be stored by the cooker).

In case of fire

1. Get everyone out of the motorhome as quickly as possible using whichever exit is the quickest including windows. Do not stop to collect any personal items.
2. Raise the alarm — Call the fire brigade.
3. Turn off gas container valve if safe to do so.

Ventilation and Condensation

The ventilation points on your motorhome are fixed points of ventilation which are stated by the European Standards. Under no circumstances must these vents be blocked or obstructed. It is advised that fixed ventilation points and any protective screens are checked and cleaned (if necessary) on a regular basis.

Fresh air circulation should be allowed below the motorhome when appliances are in use and when flues terminate below the floor to allow free evacuation of the products of combustion. At least three sides of the underfloor space should always be kept open and unobstructed especially by snow. Do not make any additional openings in the floor.

Under no circumstances must these vents be blocked or obstructed.

Additional night time ventilation is obtained by releasing the window catches and placing them in the second groove on the frame catch.

Awnings

There is no danger of pollution of an enclosed awning space by the LPG exhaust from the refrigerator venting into it.

WARNING: Space heaters may produce sufficient exhaust gases to pollute the awning space if it is totally enclosed (from a general comfort, smell, and hygiene point of view). In the extreme case, there could be a build up of carbon dioxide to a dangerous level.

Note: Motorhome owners are advised to allow some fresh air circulation into the awning space when such appliances are in use.

ELECTRICAL SYSTEMS

Batteries

Battery terminals and connectors should be firmly attached. Battery surfaces should be free of moisture and dirt.

Where removable cell taps are fitted these must be screwed firmly home.

When removing a battery always remove the negative cable first. On re-connection the negative cable should be connected last. Switch off all lamps and appliances before disconnecting the battery. Do not smoke while working on or near to the battery.

Fuses

Always replace blown fuses with one of a correct rating.

Overload

Never overload any electrical circuit, especially the 12-volt socket outlet. The rating of appliances should be checked before connection.

Shower Compartment Light

Ensure that water does not ingress into the light unit.

Charger Unit

Keep the charger unit well ventilated and never allow material or bags to be in contact with the unit casing which gets hot when the unit is operating.

230 Volt Mains Operation

Before connecting to the supply, ensure that the contacts in both the plug and the socket are clean and dry and that the hook-up plug is firmly located and locked into the socket. The RCD must be easily accessible at all times.

GENERAL

Before using your Auto-Sleeper, you should be fully conversant with the following safety precautions; if you are in any doubt as to the meaning of any of them you should contact your supplying Auto-Sleeper dealer. Please read the following carefully.

In the interests of safety, replacement parts for appliances should conform to the appliance manufacturer's specification and should be fitted by them or their authorised agent.

WARNINGS:

1. **Never use portable cooking or heating equipment, other than electric heaters that are not of the direct radiant type, as it is a fire and asphyxiation hazard.**
2. **Do not use cookers as heaters or dry clothes etc on the cooker or space heater.**
3. **Make sure that combustible materials can not come into contact with hot surfaces or burners.**
4. **Surfaces of appliances may become hot in use and the guard provided does not give full protection to the young and elderly.**
5. **Do not use additional independent gas appliances inside the vehicle.**
6. **Never allow modifications of electrical or LPG systems or appliances except by qualified technicians.**

The water heater fitted to this vehicle is of the "room sealed" type, any replacement should be the same, i.e. "room sealed".

Turn off all gas equipment and cylinders/ tanks and any other heating appliances before travelling.

Ventilation openings are located below all the gas appliances, and in the base of the gas locker. In winter conditions make sure the vents are clear of snow and mud. These openings should be regularly checked and any mesh covering them cleaned with a stiff brush to prevent any risk of them becoming blocked. The openings are provided for your safety - please do not obstruct them.

Air Bags

Do not fit rear-facing children's seats to front facing seat protected by air bags. It is recommended that small children do not sit in the front passenger seat whilst the vehicle is in motion. Follow the advice given in your base vehicle instruction book.

Smoke Alarm

Features

- Battery operated.
- Operating light (LED) flashes approximately every 45 seconds confirming unit is powered.
- Low battery warning. Unit “beeps” approximately every 45 seconds for up to 30 days when the battery needs replacing.
- Sensitivity test button. Tests sensitivity, circuitry, battery, horn (and emergency light, model 350 only).
- Loud 85 decibel Piezo electric alarm. Automatically resets when hazardous condition has passed.

WARNING: Test smoke alarm operation after vehicle has been in storage, before each trip and at least once per week during use.

Your alarm requires one 9 volt battery. Under normal use, the battery should last approximately one year.

Simple maintenance

Vacuum every six months to help keep the unit working efficiently. Open cover and gently vacuum interior of detector. Keep vacuum nozzle from touching the unit.

Problems are indicated by two events:

1. The alarm does not sound upon pressing the test button.
2. The operating light remains steadily on or off (i.e. does not flash approximately once every 45 seconds, when the unit it not in alarm).

Try the following:

1. Inspect for obvious damage.
2. Visually check that unit contains recommended battery type.
3. Check that battery is properly connected.
4. Gently vacuum as recommended above.
5. Replace battery.

If these procedures do not correct the problem, do NOT attempt repairs. Contact the manufacturer.

Carbon Monoxide Alarm

A Fire Angel CO-808 battery operated alarm is fitted near the ceiling on the wardrobe side panel.

Features

- An advanced electrochemical sensor designed to accurately measure low levels of carbon monixide (CO) providing an early warning of toxic CO levels in your motorhome.
- Detects carbon monoxide continuously.
- Resistant to false alarms caused by normal household contaminants.
- Sounds a loud 85dB alarm (at 3 metres/ 10 feet) to alert you in case of an emergency.
- Test/Reset button.
- Simple to mount, portable, ideal for travelling.
- Conforms to the British Standards Institute (CSI) Carbon Monoxide Standard BS7860 : 1996.
- Five year limited warranty (batteries excluded).

Operating Features

Your FireAngel detector offers many features which set it apart from other CO detectors on the market today.

Test/Reset Button Feature

This button will:

- Test your horn, battery and circuitry.
- Silence the loud 85dB (at 3 metres/10ft) horn during an alarm.
- Allow you to test the sensor by blowing smoke into the detector vents.

Testing the Horn, Battery and Circuitry

Test the horn, battery and circuitry by pressing the Test/Reset button to confirm that the detector is operating properly. The horn

should sound as soon as the button is pressed, and both the red LEDs will flash indicating that the horn is working and the battery is providing power to the unit. This test for the horn, battery and circuitry should be performed on a weekly basis.

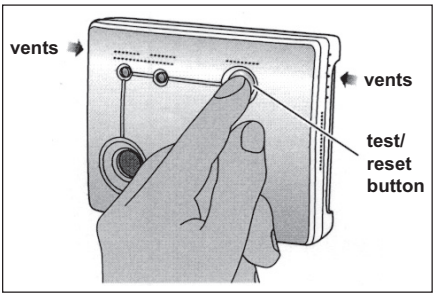

Testing the Sensor

CAUTION: All sensor testing should only be performed by a responsible adult. This test should only be performed once a month. Excessive testing will cause the battery life to be shortened.

Note: CO test kits may be used in order to avoid having to burn cigarettes, incense sticks etc.

Please read all steps throughly before attempting to test your alarm.

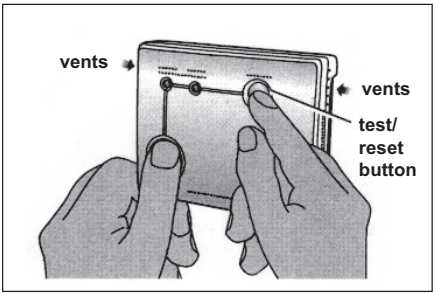

Step 1: If alarm is wall mounted remove by unhooking unit from wall fixing screws.

Step 2: Place left thumb/finger over the sounder vent. Hold the Test/Reset button down with right thumbfinger until the High Level LED stops flashing and only the Low Level LED flashes once per second (this should happen after around 5 seconds). Upon releasing the Test/Reset button the High Level LED will begin to flash twice in quick succession every 5 seconds. This indicates that the detector is now monitoring continously for CO and may be tested using a known source of CO.

Step 3: Light a cigarette or an incense stick using a match or lighter. Extinguish the lighter, or put out the match and place it into a dish of water.

Step 4: Turn the alarm on its side so that the vents nearest the Test/Reset button on the side of the alarm are pointing down ward (see diagram below). Hold the burning cigarette or incense stick 15-20cm (6-8 in) below the detector, so that the smoke moves towards the holes in the sides of the detector. An increase in the carbon monoxide level to more than 100ppm will cause the horn to sound momentarily and the High Level LED to illuminate continuously for a short time and then flash rapiidly. (Note - it make take up to 2 minutes of exposure to the smoke for the carbon monoxide levels to reach over 100 ppm).

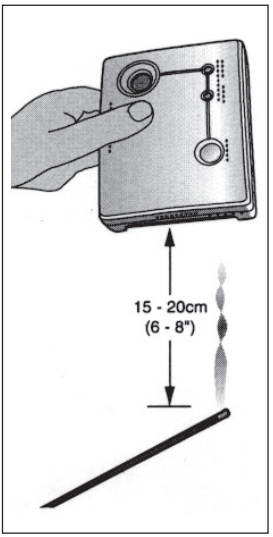

Step 5: After step 4, put out the incense stick or cigarette by placing it into a dish of water. Ensure that all flames have been extinguished. As the level of CO falls the High Level LED will stop flashing and will again continuously illuminate for a short time. The unit will then return to sensor test mode with the High LEvel LED flashing twice every 5 seconds.

Step 6: After four minutes the detector will

return to normal monitoring mode and the High LEvel LED will flash once per minute.

Note: The reason we recommend using cigarettes or incense sticks to test your alarm's sensor is that carbon monoxide is contained within the smoke given off by them as they burn inefficiently. Candles/matches etc will not provide a source of CO as they do not burn inefficiently. Your CO detector cannot detect smoke.

Understanding different alarms

High Level Alarm

If a high level of CO (above 70ppm) has been detected for a specified period of time, a loud continuous 85dB (at 3 metres) alarm will sound and the High Level LED will flash once very 5 seconds. Press the Test/Reset button to silence the alarm for 6 minutes. If the CO level remains above 70ppm during this 6 minutes, the alarm will again sound.

Low Level Alarm

The detector will sound a loud continuous 85dB (at 3 metres) alarm and the Low Level LED will flash once every 5 seconds when a low level of CO (35ppm-70ppm) has been continuously detected for 4 hours. To silence the alarm, press the Test/Reset button. If the CO level remains above 35ppm for the next 4 hours, the alarm will again sound.

Continued low level alarms are an indication that the potential of a high level alarm exists. You should treat this alarm very seriously. Prolonged low levels of CO are believed to cause brain damage and heart disease, particularly in children and pregnant women. Call a qualified service engineer and have the problem investigated and rectified immediately. In the case of gas appliances this must be a CORGI registered installer.

WARNING: If both the High Level LED and the Low Level LED are flashing, the unit has detected both High and Low levels of carbon monoxide. You should treat this as a High Level Alarm, and act accordingly.

Low Battery/Error Warning

When your battery needs replacing, the High LEvel LED will continue to flash once per minute and the detector will chirp once per minute for up to 30 days. Replace the battery immediately! When there is no battery in place, the red 'missing battery' indicator will appear at the top of the unit to remind you to replace the battery. If the unit continues to chirp, even with a fresh battery, then your detector is indicating that a fault has developed.

On discovering a fault please contact the FireAngel Technical Support Line between 10am-4pm, Monday to Friday.
Tel: 024 7623 6663 (1-800 523171 in Eire).
E-mail: technicalsupport@fireangel.co.uk

Quick Reference Label

A Quick Reference Label is located on the back of your detector and provides you with general instructions on the actions to take when your alarm sounds. For full details, read this owner's manual carefully.

What to do in the event of an alarm

WARNING: A loud alarm is a warning that high and potentially lethal levels of carbon monoxide are present. Never ignire this alarm, further exposure can be fatal. Immediately check residents for symptoms of carbon monoxide poisoning, and contact the proper authorities to resolve all CO problems.

NEVER IGNORE A LOW-LEVEL OR HIGH-LEVEL ALARM

Please carefully review these instructions to ensure that you know what actions to take in the event of both high and low-level alarms.

What to do during a high-level alarm

- Open the doors and windows to ventilate.
- Turn off the appliance where possible and stop using the appliance.
- Silence the alarm by pressing the Test/Reset button.
- Evacuate the property leaving the doors and windows open.
- Ring your gas or other fuel supplier on their emergency number, keep the number in a prominent place.
- Do not re-enter the property until the alarm has stopped.
- Get medical help immediately for anyone

suffering the effects of carbon monoxide poisoning (headache, nausea), and advise that carbon monoxide poisoning is suspected.

- Do not use the appliance again until it has been checked by an expert. In the case of gas appliances this must be a CORGI registered installer.

What to do during a low-level warning

- Open all doors and windows to ventilate.
- Turn off all appliances that are potential sources of CO when possible, and stop using the appliance. These may include gas and wood-burning fireplaces, all gas appliances, and barbecues.
- Silence the alarm by pressing the Test/ Reset button.
- Do not use the appliance again until it has been checked by a qualified service engineer. In the case of gas appliances this must be a CORGI registered installer.
- Get medical help immediately for anyone suffering the effects of carbon monoxide poisoning (headache, nausea), and advise that carbon monoxide poisoning is suspected.

Battery installation/replacement

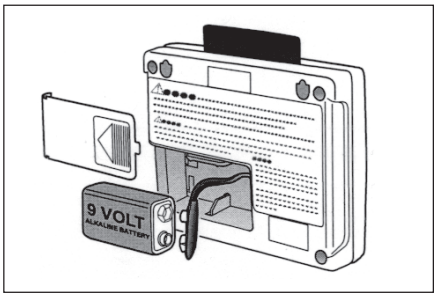

a. If the detector is wall mounted then unhook it from the mounting screws.

b. Remove the battery cover located on the back of the detector.

c. Replace the battery with an approved 9 volt alkaline battery, making sure the battery terminals align properly with the detector terminals and push the battery into place. Use of a battery other than the battery recommended by FireAngel Ltd can have a detrimental effect on the detector operation. Replace the battery cover and return the detector to the origiinal position.

d. When the battery is first inserted the detector will shortly emit a single beep and the LEDs will flash to indicate that the battery is properly connected.

e. Your advanced FireAngel detector does not require a proplonged ‘power-up’ period. If you have followed all of the above steps correctly, your unit will begin monitoring for CO in 20 minutes. After the 20 minute warm-up period, the High-Level LED will flash once per minute to indicate that the detector is powered up and is monitoring for CO.

f. Test the horn, battery and circuitry by pressing the Test/reset button to confirm that the detector is operating properly. The horn should sound as soon as the button is pressed, and the LEDs will flash indicating that the horn is working and the battery is providing power to the unit. This test for the horn, battery and circuitry should be performed on a weekly basis.

WARNING: Prolonged exposure to the horn in close proximmity will damage your hearing.

When there is no battery in place, a red missing battery indicator will remind you to replace the battery. Under normal operating conditions, the battery should last one year.

The battery life in full alarm is 7 days. The detector will not protect against the risk of CO poisoning when the battery has drained.

Caution: Constant exposure to extreme high or low temperatures amy reduce battery life.

Maintaining/Testing your detector

Maintenance

Your detector will alert you to potentially hazardous CO concentrations in your home when maintained properly. To maintain your Fireangel detector in proper working order,

and to ensure that your sensor will maintain its 5 year life, it is recommended that you:

- Test horn, battery and circuitry at least once per week.
- Test sensor once per month.
- Keep the detector free of dust by gently vacuuming the case with a soft brush attachment once per month.
- Never use cleaning solutions on your detector. Simply wipe with a slightly damp cloth.
- Do not paint the detector.
- Do not spray aerosols on or near the detector.
- Move the detector to a safe location and store in a plastic bag before painting, wall papering, using or performing any other activities that use materials that emit strong fumes. WARNING: Your alarm will not detect CO when it is stored in this way). Remember to remove it from the bag and replace the detector when these activities are finished.

Technical information

Detector specifications: Model CO-808.

Sensor Type: Electrochemical.

Sensor Life: 5 years.

Sensor range: 10ppm-999ppm.

Alarm Sound Level: 85dB (at 3 metres/10ft).

Recommended Batteries: Duracell 9V Ultra, Duracell MN1604, Energizer 522, Energizer 9V Ultra+, Gold Peak 1604A.

Battery Life: Exceeds 1 year, replaceable.

SECURITY

Chassis number

Record the chassis number and the factory job number of your motorhome, and keep them in a safe place at home.

The chassis number is a 17 digit number, beginning with the letters VF3, and is found stamped on a plate visible through a window in the bottom left hand corner of the windscreen, and also on a plate under the bonnet attached to the bonnet closing crossmember. (This plate also contains the permissible weight data).

The factory job number is an alphanumeric code consisting of a letter followed by four numbers, and is found on a label inside the glove box.

Motorhome Theft

The theft of a motorhome can occur in the most unlikely circumstances; from a motorway service area, even from an owner's driveway.

Secure all windows and doors when your motorhome is unoccupied even if only for a short length of time.

Additional security

Consider fitting any device which might deter or prevent intrusion by thieves. A wheel lock prevents removal of the wheel.

Window etching of the chassis number is a cost effective deterrent.

Free crime prevention

Advice about securing your motorhome, protecting your valuables, property marking, either at home or whilst on site, can be obtained from the Crime Prevention Officer through your local Police Station.

Please read and become familiar with operating instructions for equipment fitted in your motorhome.

Connection of services are dealt with under separate headings, Water, Electricity and Gas.

WATER SYSTEMS

Fresh/Waste Tanks

The fresh and waste water tanks are located under the floor near the middle of the vehicle. The drain taps for both tanks are clipped to the underside of the vehicle on the offside, with the waste drain being nearer to the rear of the vehicle.
For capacities of both see the Technical Specification Section.
The fresh water tank is filled through the Whale socket on the offside of the vehicle using the special hose supplied.
All pipe work is manufactured to food grade material specification.

Breathers

Both tanks are fitted with breathers, which allow air displacement when filling. When filling the fresh water tank, water may escape through these breathers; this should give no cause for concern.

Frost Precaution

If the vehicle is not being used during freezing conditions the water must be drained. Whilst the vehicle is being used in such conditions, and the water heater is at risk of freezing, it should be drained by opening the drain valve.

FRESH WATER PUMP

A Whale high flow submersible pump is fitted into the freshwater tank of your vehicle. It has a maximum flow rate of 14.8 litres (3.2 gallons) per minute.

Operation

With pump switch off and battery fully charged, fill water tank, open all taps, then turn pump switch on. Water will begin to flow. When the water is free of air, turn taps off. Remember, you are filling the water heater and the toilet and shower lines. When all valves are shut-off, pump will stop.

Caution: Should pump fail to stop, turn switch off and see the trouble shooting guide.

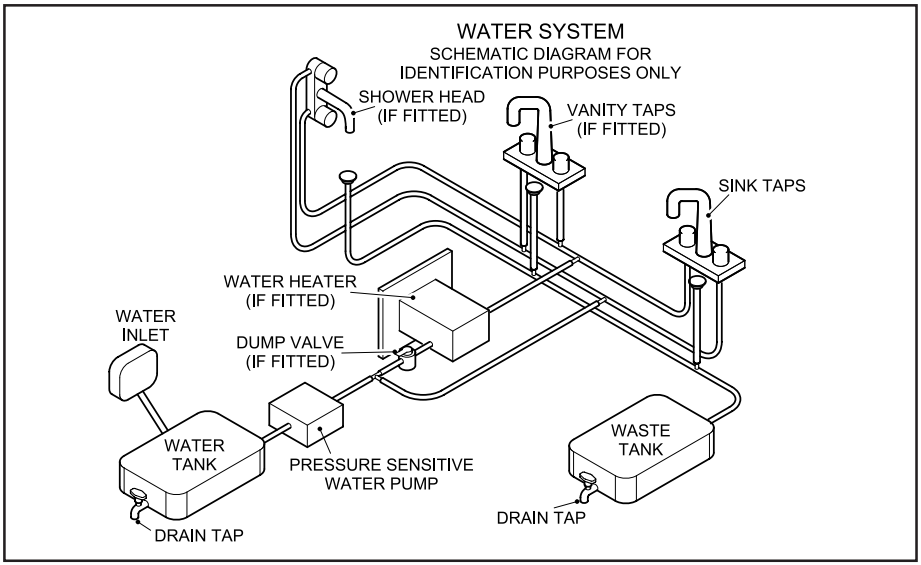

Sanitising

Portable water systems require periodic maintenance to delivery a consistent flow of freshwater. Depending on use and the environment the system is subject to, sanitising is recommended prior to storing and before using the water system after a period of storage.

Systems with new components, or ones that have been subjected to contamination, should also be disinfected as follows:

1. Use of the following methods to determine the amount of common household bleach needed to sanitise the tank.
   (A) Multiply “gallon of tank capacity” by 0.13; the result is the ounces of bleach needed to sanitise the tank.
   (B) Multiply “litres of tank capacity” by 1.0; the result is the milli-litres of bleach needed to sanitise the tank.
2. Mix into solution the proper amount of bleach within a container of water.
3. Pour the solution (water/bleach) into the tank and fill the tank with potable water.
4. Open ALL taps (hot and cold) allowing the water to run until the distinct odour of chlorine is detected.
5. The standard solution must have four (4) hours of contact time to disinfect completely. Doubling the solution concentration allows for contact time of one hour.
6. When the contact time is completed, drain the tank. Refill with potable water and purge the plumbing of all sanitising solution.

Winterising

Allowing water to freeze in the system may result in damage to the pump and plumbing system.

Non-toxic anti-freeze for potable water may be used with Flojet pumps. Follow manufacturers recommendations.

Refer to coach or equipment manufacturers instructions for their specific winterising and drainage procedures.

WARNING: Do not use automotive anti-freeze to winterise potable water systems. These solutions are highly toxic and may cause serious injury or death if ingested.

1. Drain the water tank. Open tank drain valve. You may use the pump to drain the tank by opening all the taps in the system. Allow the pump to operate until the tank is empty. Do not operate the pump more than 15 minutes continuously.
2. Open all taps and purge the water from the plumbing system. Turn power to the pump off. Be sure that all the water from the drain lines are drained.
3. Remove quick connect inlet and outlet fittings from the pump and turn the pump on to pump out remaining water from the pump head. Be sure to have a catch pan or a rag under the pump to prevent water from spilling onto the RV. Turn the pump off once the plumbing is empty. Leave the fittings disconnected from the pump until the system is ready to be used again. Make a note on your tank filler that the plumbing is not connected.
4. Be sure that all taps are left open to protect against damage to the plumbing.

Troubleshooting

Vibration induced by road conditions can cause plumbing to loosen. Check for any system components that are loose. Many symptoms can be resolved by simply tightening the hardware.

Failure to prime - motor operates, but no pump discharge - check:

- Restricted intake or discharge line.
- Air leak in intake line.
- Debris in pump.
- Punctured pump diaphragm (pump leaks).
- Crack in pump housing.

Motor fails to turn on - check:

- Loose wiring connection.
- Pump circuit has no power.
- Blown fuse.
- Pressure switch failure.
- Defective motor.

Pulsating flow - check:

- Restricted pump delivery. Check discharge lines, fittings and valves for clogging or undersizing.

Pump fails to turn off after all fixtures are closed - check:

- Empty water tank.
- Insufficient voltage to pump (low battery).
- Punctured pump diaphragm (pump leaks).
- Discharge line leak.
- Defective pressure switch.

Low flow and pressure - check:

- Air leak at pump intake.
- Accummulation of debris inside pump and plumbing.
- Worn pump bearing (excessive noise).
- Punctured pump diaphragm (pump leaks).
- Defective motor.

GAS

GENERAL INFORMATION

The gas appliances in this vehicle are powered by Liquified Petroleum Gas (LPG) which is stored, under pressure, in a tank located under the floor in the centre of the vehicle. This tank is refilled, when required, at a re-fuelling station using a nozzle and hose in a similar way to refilling the engine fuel tank. Make sure that heating and cooking appliances are switched off before you move the motorhome.

The regulator

Your motorhome is fitted with a regulator as standard equipment. The gas regulator has a working pressure of 30mbar and is suitable for use with all commercially available brands of LPG. It is fitted adjacent to the tank installation under the vehicle and requires no attention from the owner whilst using the vehicle.

Availability

LPG is becoming more widely available as more vehicle engines are converted to run on it. Many garages now have an LPG pump and other outlets are available in more rural areas, often near farming communities for instance. Look for signs advertising 'Autogas'.

If you have internet access, search for 'LPG filling stations' and there are many sites where input of your postcode will locate the nearest filling station to your location.

There are many companies producing LPG but all brands are suitable for use in your vehicle.

LPG Re-fuelling

LPG re-fuelling is simple and efficient, carried out in much the same way as petrol and diesel with a hose and nozzle designed to lock onto the filling connector on the vehicle. The refulling point is located behind a black plastic cover on the nearside of the vehicle behind the side door.

Once the connection is made, the customer simply presses and holds down a button on the dispenser until they have put the required amount of fuel into the vehicle or until the tank is full.

LPG tanks are fitted with a valve that stops the flow once the tank has reached its maximum safe filling level. Once the meter stops the customer simply disconnects the nozzle and returns it to the dispenser.

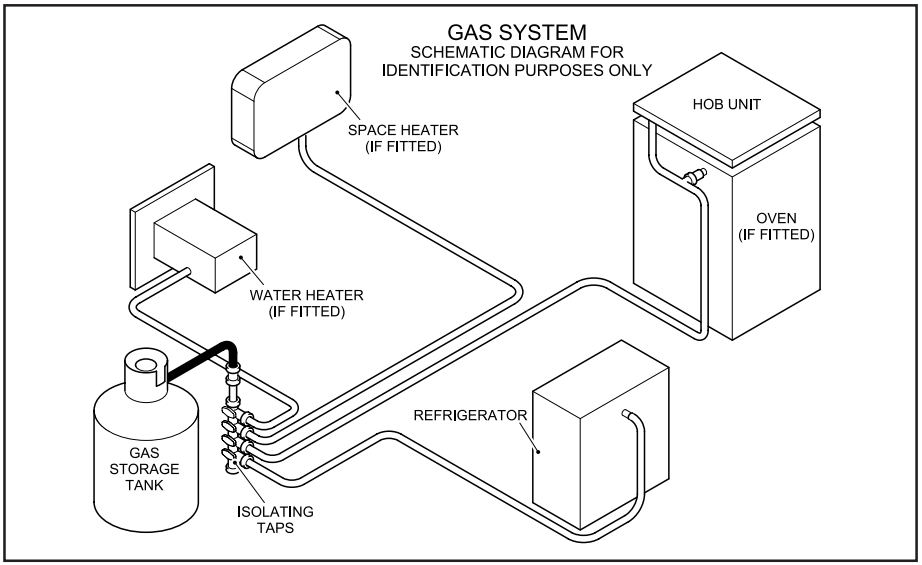

Safety Note

- When pulling up to the Autogas dispenser ensure the vehicle is parked with the filling connector located nearest to the dispensing pump.
- Apply the handbrake and switch off the engine.
- No smoking, naked flames or mobile phones are allowed on the Service Station forecourt.
- The use of an adaptor is not recommended.
- Refilling of portable LPG cylinders is not allowed.
- All dispensing nozzles should be fitted with a nozzle shield. Please report to staff if missing.

Filling Nozzles

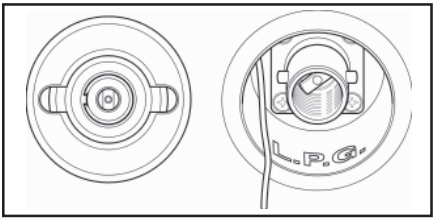

When connecting the nozzle to the filler valve on your vehicle always check that the locking pins are aligned.

There are two main types of filling nozzles used in the UK - ‘Gas Guard’ and ‘De Visser’. Gas Guard uses a rotating barrel to lock on to the filler valve wherease De Visser uses a lever.

1 - Gas Guard nozzle filling instructions

Ensure Gas Guard nozzles are fitted with protective nozzle shields. Report to site staff if missing. (Nozzle shields have been removed from picture for clarity).

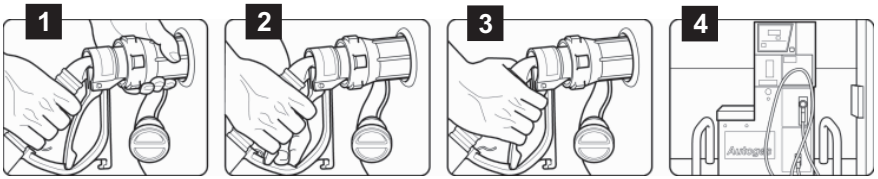

Connecting

(1) Push nozzle over the lugs on the filler valve and turn barrel a quarter turn clockwise to lock. Do not squeeze lever before nozzle is connected.

Caution: From this moment onwards ensure hands are away from the nozzle barrel.

(2) Pull back lever and latch into place. Ensure lever is latched securely. Follow instructions on dispenser to commence dispensing.

Disconnect

(3) Ensure hands are away from the nozzle barrel.

Caution: When dispensing has ended, squeeze back lever and release latch. Release lever fully. A small release of gas will occur as you release the lever. This is normal! Do not place hands on barrel until after the gas has been released.

(4) Turn barrel anti clockwise a quarter turn to release nozzle from vehicle. Replace nozzle in holder on dispenser.

1 - De Visser nozzle filling instructions

Ensure De Visser nozzles are fitted with protective nozzle shields. Report to site staff if missing. (Nozzle shields have been removed from picture for clarity).

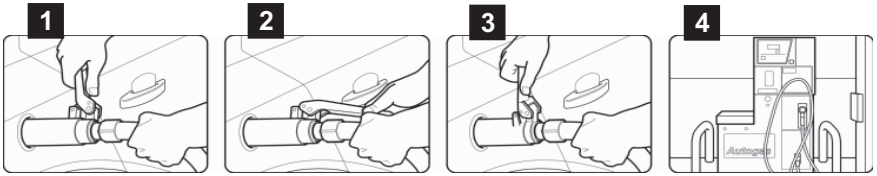

Connecting

(1) Hold the hose behind the nozzle and the guard, keeping lever pushed forward with the handle at 12 o'clock position. Locate the nozzle over the lugs on the filler valve and turn the lever a quarter turn clockwise to lock.

Caution: From this moment onwards ensure hands are away from the nozzle barrel.

(2) Pull back lever towards hose and latch into place. Ensure lever is latched securely. Follow instructions on dispenser to commence dispensing.

Disconnect

(3) Ensure hands are away from the nozzle barrel.

Hold hose behind guard and release lever by pushing forward. A small release of gas will occur as you release the lever. This is normal!

(4) Turn lever anti clockwise a quarter turn to release nozzle from vehicle. Replace nozzle in holder on dispenser.

GAS SAFETY ADVICE

Facts about LPG

- LPG is not poisonous.
- LPG has been given a smell by manufacturers in order to identify leaks.
- Bi-products of combustion are harmless.
- There is danger if all air and oxygen are excluded, therefore ventilation holes must be kept clear at all times.

PRECAUTIONS

a) Never look for a leak with a match. Always use a soap solution or its equivalent when testing connections. Do not operate any electrical apparatus whatsoever, especially light switches. If the leak is not obvious, the vehicle should be evacuated and qualified personnel consulted.

b) Avoid naked lights when re-fuelling.

c) LPG is more dense than air. Consequently any vapour may flow along the ground and into drains, sinking to the lowest level of the surroundings and be ignited at a considerable distance from the source of leakage. In still air the vapour will disperse slowly.

VENTILATION

General

Fixed ventilation is a statutory requirement in all motorhomes. These ventilation apertures are positioned at both high and low level and for your safety should not be obstructed, even partially.

Low Level Ventilation

Under each appliance is a fixed ventilation aperture, of a size commensurate with the rating of the appliance itself. It is either gauze covered or incorporates a fixed plastic vent. This should be checked regularly to see that it has not become blocked.

High Level Ventilation

High level ventilation is provided by the roof vents. The ventilation provided has been carefully calculated and relates to the rating of the appliances in the vehicle. Roof vents must not be covered with anything that may limit or affect the ventilation they provide.

Maintenance

Under no circumstances should any fixed ventilation aperture be blocked, covered, either partially or fully, or be modified in any manner whatsoever. They should be checked at least annually for damage or blockage.

Screens and/or grilles should be kept clean and free from dust. See diagram of upper/ lower ventilation.

All ventilation complies with BS EN 721 and vents should not be obstructed in any manner as this could lead to insufficient fresh air. In this case the confined atmosphere becomes depleted of oxygen which leads to the formation of the highly poisonous gas ‘carbon monoxide’. Carbon Monoxide is odourless, colourless and tasteless and will rapidly cause unconsciousness and death with little or no warning prior to collapse. THERE IS NO DANGER WHEN ADEQUATE VENTILATION IS PROVIDED.

When you are cooking, it is essential to provide additional ventilation such as opening windows near grill, cooker or oven.

Roof-mounted Flue installations

All flue installations should be inspected once a year throughout their length for corrosion. Flues should be replaced if any sign of perforation is found. Ensure that the replacement is of an approved type.

WARNING: Never allow modification of LPG systems and appliances except by qualified persons.

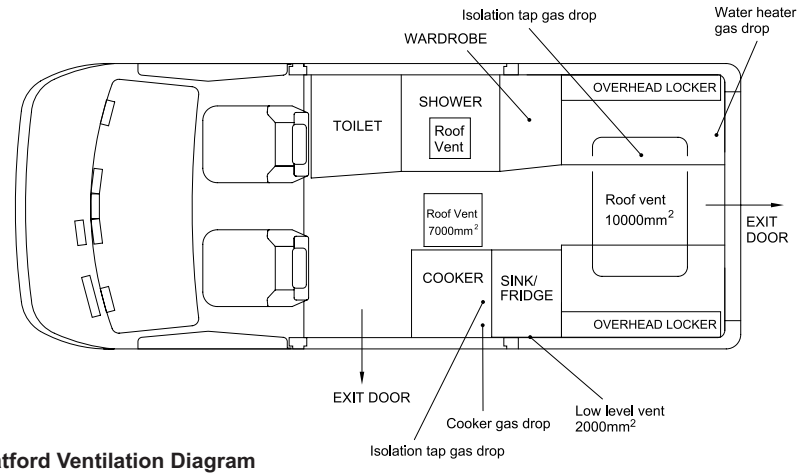

Stratford Ventilation Diagram

Connection

Before turning on the gas supply, ensure that all gas operated equipment in the motorhome is turned off.

All gas equipment is supplied through a central Gas Manifold System which has individual isolation taps for each appliance denoted by a symbol (see below).

WARNINGS:

1 **Interior outlet sockets must only be used with original appliances supplied by manufacturer.**

2 **No appliance must be used outside when connected to an internal socket.**

3 **No additional appliance must be used inside the motorhome.**

Never use portable cooking or heating equipment other than electric heaters, that are not of the radiant type as they are a fire and asphyxiation hazard.

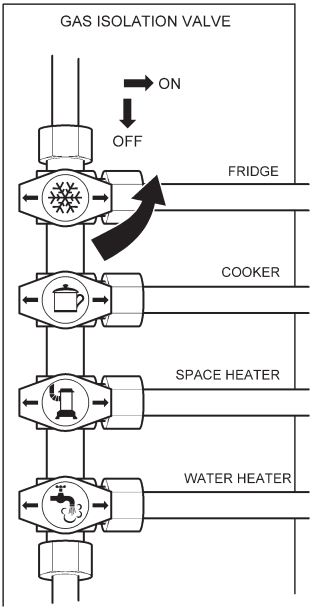

Gas isolation valve

Note: Amount and order of taps may vary from that which is shown.

Safe Usage

To avoid accidents, the following fundamental advice should be carefully read before using gas appliances.

- Always read and follow the use and maintenance instructions provided by the manufacturers of gas equipment. Should any soot accumulate on pans, fire radiants, etc., or any smell be produced, consult a competent installer on the correct maintenance and adjustment of burners.
- Never check for gas leaks with a naked flame.
- Never use gas appliances without adequate ventilation. All gas appliances require a plentiful supply of fresh air for correct operation. Fixed ventilators or air inlets should not be stopped up. Where practicable, turn off all appliances before retiring to bed, preferably at the cylinder or inlet to the motorhome or other dwelling.
- Unless the appliance incorporates automatic ignition, when lighting an appliance always make sure you apply a lighted match or taper to the burner before turning on the gas.
- If any appliance is disconnected for repair, maintenance, etc., ensure that the gas line is capped off.
- If taps are stiff to operate or appear to be a source of leakage, call in a competent installer to rectify. LPG taps require a special grease.
- Always seek advice when in doubt.

Input Ratings

Input rating for the gas appliances are as follows:

Refrigerator 0.1kW

Heater 2.4kW

Grill 1.5kW

Water heater 1.5kW

Oven 1.5kW

Hob burners (x3) ..... 1.5kW (each)

ELECTRICITY

As with electricity in the home, care must be exercised when handling mains electricity.

Your attention is drawn to the following notice as laid down by the Institute of Electrical Engineers.

INSTRUCTIONS FOR ELECTRICITY SUPPLY

On arrival at caravan site
The motorhome mains inlet flexible supply cable and its limits are shown on page 7-12.

1. Before connecting the motorhome installation to the mains supply, check that:

(a) the mains supply is suitable for your installation and appliances, i.e. whether it is a.c. or d.c. and whether it is at the correct voltage and frequency,

(b) your installation will be properly earthed. Never accept a supply from a socket outlet or plug having only two pins, or from a lighting outlet, and

(c) any residual current device (earth leakage circuit breaker) in the mains supply to the motorhome has been tested within the last month.

In case of doubt, consult the site owner or his agent.

2. **MAKE SURE THAT THE SWITCH AT THE SITE SUPPLY POINT IS OFF.**
3. Lift the cover of the electricity inlet provided on the motorhome, and insert the connector of the supply flexible cable.
4. Remove any cover from the socket outlet provided at the site supply point, and connect the plug at the other end of the supply flexible cable to this. Switch on the main switch at the site supply point.

Note: Use mains cable fully uncoiled and protect from traffic.

Caution: Be aware that the 12V appliances, except the refrigerator, will not operate whilst the ignition is switched on and the vehicle engine running. The master switch on the electrical control panel controls the 12 volt supply.

IT IS IMPORTANT THAT THE MAIN SWITCH AT THE SITE SUPPLY POINT SHOULD BE SWITCHED OFF, THE SUPPLY FLEXIBLE CABLE DISCONNECTED, AND ANY COVER REPLACED ON THE SOCKET OUTLET AT THE SITE SUPPLY POINT BEFORE DISCONNECTING THE FLEXIBLE CABLE FROM THE MOTORHOME. IT IS DANGEROUS TO LEAVE THE SUPPLY SOCKET OR SUPPLY FLEXIBLE CABLE LIVE.

Note: Please check appliance manufacturers handbook to see if suitable for use with generator or charger.

A generator may only be connected via the mains socket. If using a generator you also need to comply with the requirements/ instructions supplied with the generator.

Because motorhomes are sometimes left unused for long periods in the open, it is strongly advised that the mains installation is inspected periodically to ensure that it is safe to use. The IEE Wiring Regulations recommend that mains installations in motorhomes are re-inspected every 3 years by a qualified person (see list) who should sign and issue a periodic inspection report. (The manufacturer recommends annual inspections).

Suitably qualified persons acceptable to the NCC to sign and issue inspection and completion certificates are:

- an approved contractor of the National Inspection Council for Electrical Installation Contracting* or
- a member of the Electrical Contractors' Association
- a member of the Electrical Contractors' Association of Scotland
- a qualified person acting on behalf of the above (in which event it should be stated for whom he is acting).

**The names and addresses of Approved Contractors in any locality (there are over 10,500 in the UK) can be obtained from Electricity Shops, or direct from:*

NICEIC
Vintage House, 37 Albert Embankment,
London SE1 7UJ
Telephone: 0171 582 7746

The names and addresses of members of the Electrical Contractors' Associations can be obtained direct from:

ECA
Esca House
Palace Court
London W2 4HY
Telephone: 0171 229 1266

ECA of Scotland
23 Heriot Row
Edinburgh EH3 6EW
Telephone: 0131 225 7221

WARNING: Current consumption in the motorhome must not exceed 16 amps or the pitch permitted maximum if this is less than 16 amps.

It is dangerous to attempt modifications and additions yourself. Never allow modification of electrical systems and appliances except by qualified persons. Lampholder–plugs (bayonet-cap adaptors) should not in any circumstances be used.

CAUTION: The Truma Ultraheat has the potential to draw 8 amps at 2kW. It is, therefore, advisable to check the supply rating before switching on two loads (items) greater than the supply as this may cause an overload and the circuit breaker to trip.

OVERSEAS CONNECTION

Note: Connection to a mains voltage supply OVERSEAS requires particular attention.

Care must be taken when connecting supplies abroad since the supplies can be of REVERSE POLARITY.

The significance of REVERSE POLARITY is that when equipment is switched off it may not be electrically isolated.

The only certain way of making equipment safe is to unplug it.

If electrical polarity indication is not included in your motorhome electrical equipment, it is useful to have a means of checking polarity of the mains supply, especially when touring overseas. There are available several proprietary makes of equipment for testing polarity.

If it can be achieved, it is preferable to connect live to live, and neutral to neutral to maintain full electrical protection.

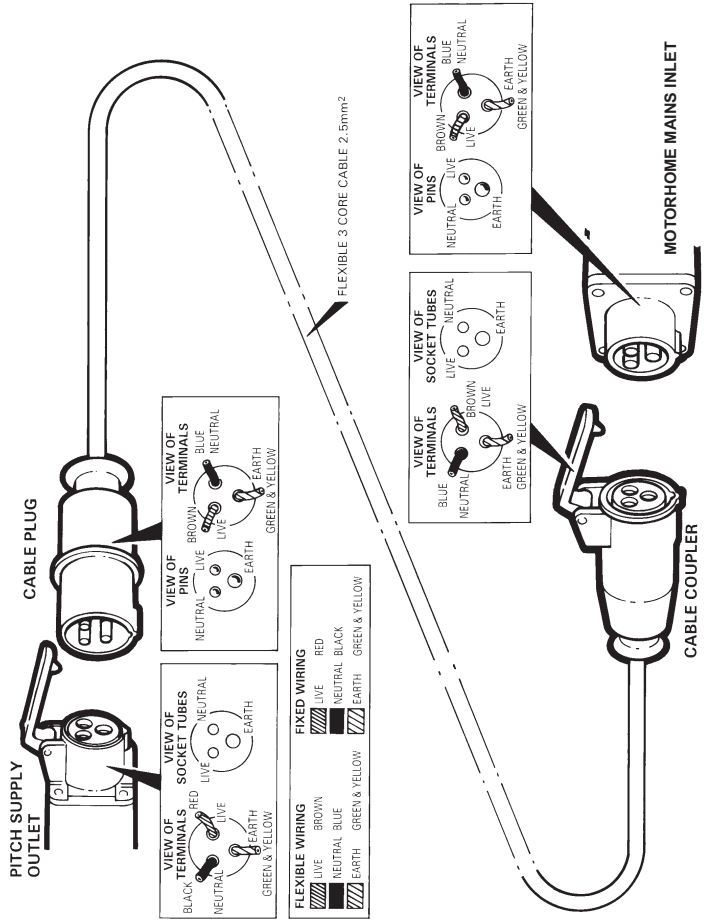

WIRING OF CONNECTING CABLE AND MOTORHOME MAINS INLET

WARNING: It is essential that connections are made exactly as shown. If terminal markings are not in accordance with the diagram they must be ignored. If in doubt consult a qualified electrician.

The legal length of the mains inlet cable is 25 ± 2 metres. When in use it must be fully uncoiled and protected from traffic.

EC155 POWER CONTROL SYSTEM

Key features

150W (~12A) combined Power Converter/ Battery Charger - Converts the 230v mains supply into 12V DC power to run the leisure equipment and charge the battery.

Low current switching voltage drop in the circuit and improved circuit fusing provides better protection for the harness and equipment.

Links to the EC50 series LED control panel to provide simple but intelligent control of the 12V equipment and built in over discharge software protects the leisure and vehicle batteries.

System overview

The following diagram shows the typical configuration of the EC155 system. The key component is the EC155 power supply unit (PSU), which is the hub of the system and provides connectivity to the ancillary components and the EC50 series control panel.

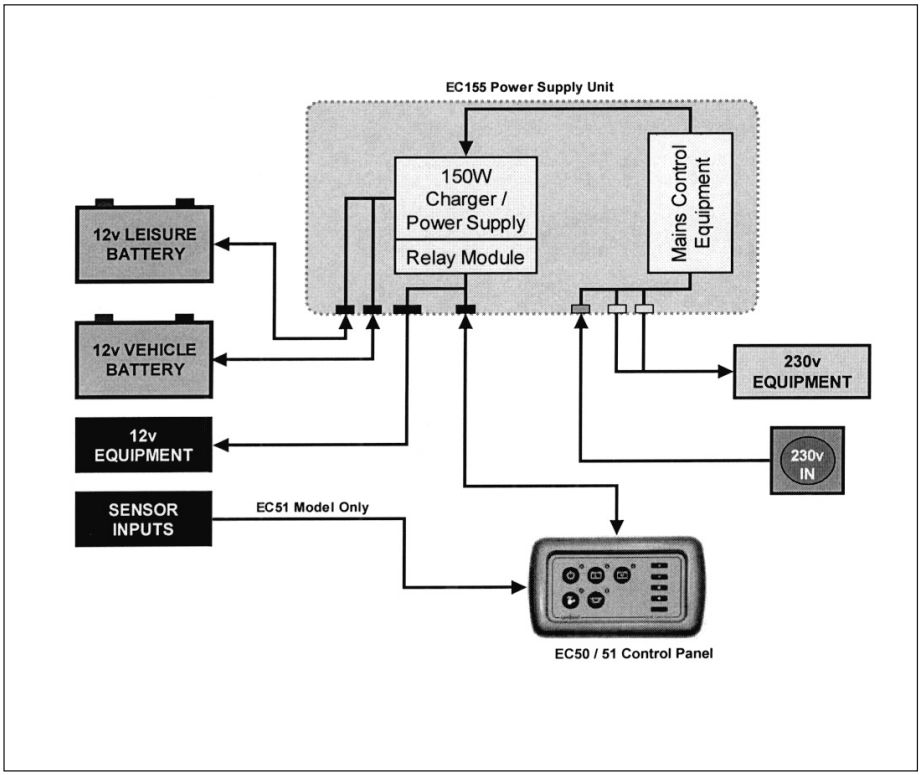

POWER DISTRIBUTION UNIT (EC155)

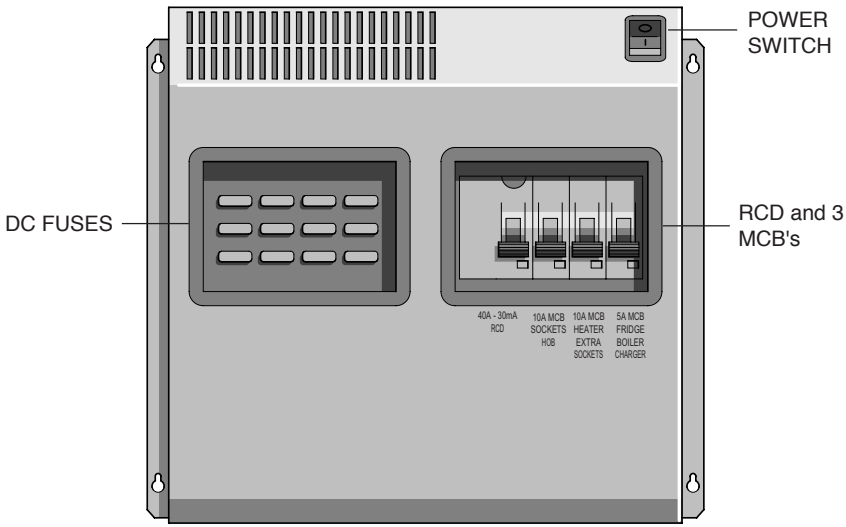

Fig. 1 EC155 Control Unit

Power supply details

For the safe operation of all electrical equipment within your leisure vehicle it is important that you read and fully understand these instructions. If you are unsure of any point please contact your dealer/distributor for advice before use.

Fig. 1 shows the EC155 PSU layout.

WARNING

Under heavy loads the EC155 PSU case may become hot. ALWAYS ensure the ventilation slots and the cooling fan have a clear flow of air. Do not place combustible materials against/adjacent to the EC155 PSU. The PSU will shutdown if overheated and will restart automatically when cool.

Battery charger/power converter

The EC155 PSU incorporates a fixed voltage battery charger/power converter. The battery charger/power converter also powers the leisure equipment when the mains supply is connected. This module supplies 13.8V DC to the leisure equipment up to a maximum of 12 amps (155 watts), therefore the available power is distributed between the leisure load and the battery, with the leisure load taking priority as per the following example:

Leisure load	Available power for battery charging
3A	9 Amps
6A	6 Amps
9A	3 Amps
12A	0 Amps

Residual Current Device and Miniature Circuit Breakers

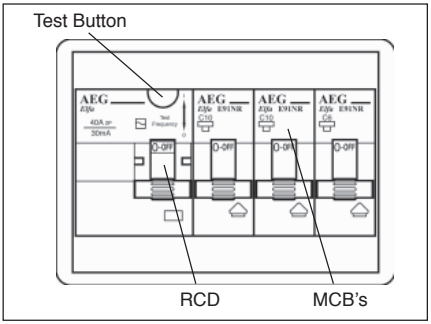

The Residual Current Device (RCD) is basically provided to protect the user from lethal electric shock. The RCD will turn off (trip) if the current flowing in the live conductor does not fully return down the neutral conductor, i.e. some current is passing through a person down to earth or through a faulty appliance.

To ensure the RCD is working correctly, the test button should be operated each time the vehicle is connected to the mains supply (see page 7-20).

The Miniature Circuit Breakers (MCB's) operate in a similar way to traditional fuses and are provided to protect the wiring installation from overload or short circuit. If an overload occurs the MCB will switch off the supply. If this occurs you should investigate the cause of the fault before switching the MCB back on.

The following table shows the rating and circuit allocation for the three MCB's.

MCB	Rating
1	10 Amps
2	10 Amps
3	6 Amps

Fuses

WARNING

When replacing fuses always replace a fuse with the correct value. NEVER replace with a higher value/rating as this could damage the wiring harness. If a replacement fuse 'blows' do not keep replacing the fuse as you could damage the wiring harness. Please investigate the fault and contact your dealer.

The following table shows the fuse allocation for the 12 fuses fitted to the EC155 PSU.

FUSE/MCB TABLE

Fuse	Rating
1	15 Amps
2	10 Amps
3	5 Amps
4	10 Amps
5	10 Amps
6	10 Amps
7	10 Amps
8	5 Amps
9	20 Amps
10	20 Amps
11	10 Amps
12	15 Amps
Battery	20 Amps

BATTERY

Type/Selection

For optimum performance and safety it is essential that only a proprietary brand 'leisure' battery is used with a typical capacity of 75 to 120 Ah (ampere/hours). A normal car battery is NOT suitable. This battery should always be connected when the system is in use.

The EC155 PSU is designed to charge standard lead acid 'leisure' batteries, however it may be used with Gel batteries depending on their composition. Please consult the battery documentation for further advice.

The battery feed is fitted with an inline fuse between the battery and the electrical harness, and is usually located immediately outside the battery compartment or within 500mm of the battery. The maximum rating of this fuse is 20A per battery.

Installation & Removal

Always disconnect the 230V mains supply and turn the EC155 PSU charger switch to the OFF (0) position before removing or installing the battery.

When connecting the battery, ensure that the correct polarity is observed (black is negative [-] and red is positive [+]) and that the terminals are securely fastened. Crocodile clips must be used.

WARNING

Explosive gases may be present at the battery. Take care to prevent flames and sparks in the vicinity of the battery and do not smoke.

Operation/Servicing

Under normal circumstances it should not be necessary to remove the battery other than for routine inspection of the terminals and "topping up" of the battery fluid where applicable. Please see instructions supplied with the battery.

Note: Do not over-discharge the battery. One of the most common causes of battery failure is when the battery is discharged below the recommended level of approximately 10V.

Discharging a battery below this figure can cause permanent damage to one or more of the cells within the battery.

To prevent over discharge, the EC155 PSU in conjunction with the EC50 series control panel incorporates a battery protect circuit that warns and then disconnects the batteries when they fall below the following conditions:

Vehicle battery voltage cut off point: 10.9V.

Action after cut off: Battery selection is changed from vehicle battery to leisure battery. If the leisure battery is below 9V then a further warning will occur (see following).

> Notes: This cut off level is designed to protect the vehicle battery from over discharge. The 10.9V level ensures there is sufficient power in the battery to run the vehicle electronics and start the vehicle. This cut off only applies to power drawn from the battery by the leisure equipment; it will not protect the battery if you leave the vehicle lights on.

Leisure battery cut off point: 9V.

Action after cut off: Power is turned off.

> Notes: This is an emergency cut off level to protect the battery from severe damage. You should not rely on this cut off level during normal operation, but manage your power consumption to a discharge level of 10V.
>
> This cut off only applies to power drawn from the battery by the leisure equipment that is controlled by the control panel power switch; it will not protect the battery from discharge by the radio or other permanently connected equipment.

EC51 CONTROL PANEL

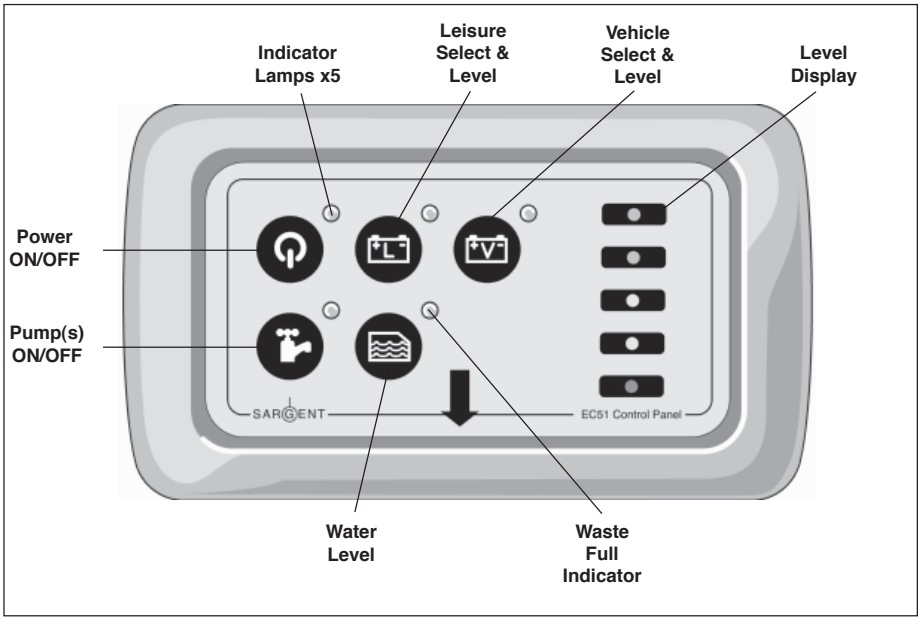

EC51 operation

Symbol	Function	Description
	Main 12V power switch	This switch turns on (or off) the 12-volt power. As the power is turned on the leisure battery is automatically selected and the LED display shows the battery voltage.
	Water pump power switch	This switch turns on the power to the internal water pump ready for use. It can be used to turn off the pump overnight to avoid any noise from the pump. When the switch is on, the LED will show green.
	Auxiliary power switch	This switch turns the Awning or Entry light on (or off). When the switch is on the LED will show green.

EC51 operation (continued)

Symbol	Function	Description
L	Select LEISURE battery and display battery voltage.	This switch is used to selected the Leisure battery and to display the battery voltage level. Press once to select and display the voltage. This display will turn off automatically after two seconds. The LED next to the button will show that the battery has been selected. If the Leisure battery drops below 9V an alarm will trigger to warn you that the battery is low. This alarm lasts for one minute and then the power will be switched off to protect the battery.
V	Select VEHICLE battery and display battery voltage.	This switch is used to select the Vehicle battery and to display the battery voltage level. Press once to select and display the voltage. This display will turn off automatically after two seconds. the LED next to the button will show that the battery has been selected. If the Vehicle battery drops below 10.9V an alarm will trigger to warn you that the battery is low. This alarm lasts for one minute and then the battery selection will automatically switch over to the Leisure battery to protect the vehicle battery.
	Water Level test.	This switch is used to display the fresh water level within the onboard water tank. Press once to select the Fresh tank and show the water level. The tank has five levels Empty, 1/4, 1/2, 3/4 and Full. This display will turn off automatically after two seconds.
	Waste Full indicator.	The LED adjacent to the water level button is used to show when the Waste Water Tank is full. The tank is full when the LED is illuminated.

System Disable

To meet EMC (Electro Magnetic Compatability) directive 89/336/EEC the EC50 series control panel will shutdown, and the electrical accessories within the vehicle will be disconnected while the vehicle is in motion. When the engine is stopped the control panel returns to standby mode ready to be turned on by the power button.

This does not apply to the fridge, which will continue to operate while the vehicle is in motion provided that 12V is selected on the fridge energy selection control.

Bar Graph technical data

LED	*Voltage reading*	*Water reading*
5	13.5-14.4	100% full
4	12.5-13.5	75% full
3	11.5-12.5	50% full
2	10.5-11.5	25% full
1	<= 10.5	Less than 25%

Operational and Safety Information

Mains connection

For your safety it is IMPORTANT that you follow these connection instructions each time your Motorhome is connected to a mains supply.

1. **Ensure suitability of the Mains Supply.** Your Leisure Vehicle should only be connected to an approved supply that meets the requirement of BS7671. In most cases the site warden will hold information regarding suitability of supply. If using a generator you also need to comply with the requirements/instructions supplied with the generator.
2. **Switch the EC225 PSU internal Charger unit OFF.** Locate the red power switch on the EC155 and ensure the switch is in the OFF (0) position before connection to the mains supply.
3. **Connect the Hook-up Lead.** Firstly connect the supplied hook-up (orange cable with blue connectors) to the Leisure Vehicle and then connect to the mains supply.
4. **Check Residual Current Device operation.** Locate the RCD within the EC155 PSU and ensure the RCD is switched on (lever in up position). Press the 'TEST' button and confirm that the RCD is turned off (lever in down position). Switch the RCD back to the on position (lever in up position). If the test button failed to operate the RCD see the TROUBLE SHOOTING section.
5. **Check correct Polarity.** Locate the 'Reverse Polarity' indicator on the EC155 PSU and ensure that the indicator is NOT illuminated. If the indicator is illuminated see the TROUBLE SHOOTING section.
6. **Check Miniature Circuit Breakers.** Locate the MCB's within the EC155 PSU (adjacent to the RCD) and ensure they are all in the ON (up) position. If any MCB's fail to latch in the on position see the TROUBLE SHOOTING section.
7. **Turn the EC155 PSU ON.** Locate the red power switch on the EC155 PSU and turn to the ON (I) position. The switch will illuminate when turned on.
8. **Check operation of equipment.** It is now safe to check the operation of the 12V and 230V equipment.

Technical data

Input 230V: 230 Volts/0 to 12 Amps (+ / - 10%).

Output 230V: RCD protected, 3 x MCB outputs of 10, 10 and 6A via 2 x 9 way connectors.

Input12V: 2 x 20A battery inputs via a single 9 way connector.

Output 12V: 20A total output via 4 x 16A switched channels protected by 12 fused outputs via a 12 way connector.

Integrated Charger: Input 220-230 volts AC +/- 19%, Frequency 50 Hz +/- 6%, Current 3A max.
DC output 13.8 Volts nominal, Current 12 Amps (155 Watts).

Signal Input: 1 x Engine running via PSU connector (4 x Fresh water level, 1 x Waste water level on EC51 version).
Fresh water negative sensed. Waste waster 5V sensed.

Data In/Out: Data communication and power to Control Panel via 8 way RJ45 connector.

IP rating: IP31.

Operating temperature: Ambient 0 to 35 deg Centrigrade. PSU case temperature with full load 65 deg Max.
Automatic shutdown and restart if overheated/overloaded.

COMMON FAULT TABLE

Fault	Possible Cause	Proposed Fix
No 230 volt output from PSU.	Connecting lead between the site and Leisure Vehicle not connected.	Check and connect lead as per page 7-18, note 3. Check also input connector at the base of the ED155 PSU.
	RCD switched off.	Reset RCD as per page 7-18, note 4.
	RCD not operating correctly.	Check supply polarity; if the RCD continues to fail contact your dealer, as there is probably an equipment or wiring fault.
	MCB switched off.	Reset MCB by switching OFF (down position) then back ON (up position), if the MCB continues to fail contact your dealer, as there is probably an equipment or wiring fault.
	No or deficient supply from site.	Contact site warden for assistance.
	Other fault.	Contact your dealer.
Control Panel Problems.	Control Panel has no display.	Check batteries and fuses, turn EC155 PSU charger switch on, and ensure mains supply is connected.
		Check control panel connecting lead at EC155 PSU and behind Control Panel.
		Contact your Dealer.
	12V Power turns off.	Battery save feature has operated to protect the vehicle battery and or the Leisure battery. See page 7-15.
		Engine has been started, all equipment has been disconnected to meet EMC requirements. See page 7-18.
		Observe control panel handling instructions.
	Control Panel display corrup/erratic function.	Control panel software may have crashed. Reboot control panel by turning off the EC155 PSU charger switch and removing fuses 9 and 10 at the EC155 PSU (2x20A fuses for leisure and vehicle batteries). Wait 30 seconds then replace the fuses and turn the charger switch on. (Alternatively, remove the bezel at the control panel by pulling down in the centre at the bottom, unplug the control panel multi-way connector, wait 30 seconds, then plug back in and reassemble.
No 12 volt output from PSU	No 230V supply.	Check all above.
	Charger not switched on.	Switch charger switch on (I) position, switch will illuminate.
	Battery not connected and /or charged.	Install charged battery as per page 7-15.
	Power switch on control panel not switched to ON.	Turn power on at control panel.
	Battery flat/Battery fuse blown.	Recharge battery, check fuses, check voltage is present at battery.
	Fuse blown.	Check all fuses are intact and the correct value fuse is installed as per fuse table.
	Equipment switched off/ unplugged.	Check equipment is switched on and connected to the 12V supply.
	PSU overheated/auto shutdown operated.	Reduce load on system. Allow PSU to cool down. PSU will automatically restart when cool. See page 7-13.
	Other fault.	Contact your dealer.
Pump not working.	Fuse blown.	Replace fuse.
	Pump turned off.	Turn pump on by pressing the pump button at the EC155 control panel (tap symbol).

12V/230V WIRING DIAGRAM

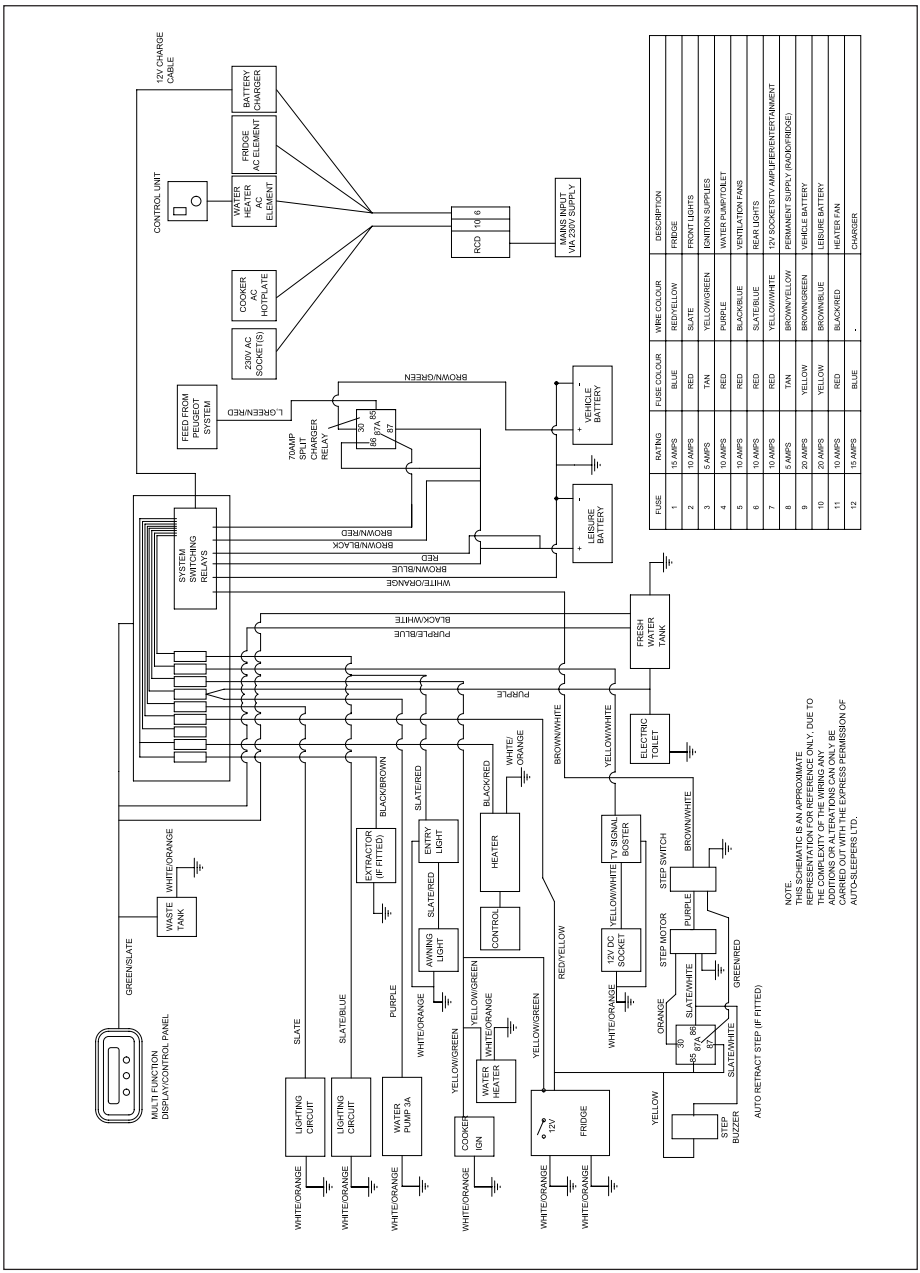

FUSE	RATING	FUSE COLOUR	WIRE COLOUR	DESCRIPTION
1	15 AMPS	BLUE	RED/YELLOW	FRIDGE
2	10 AMPS	RED	SLATE	FRONT LIGHTS
3	5 AMPS	TAN	YELLOW/GREEN	IGNITION SUPPLIES
4	10 AMPS	RED	PURPLE	WATER PUMP/TOILET
5	10 AMPS	RED	BLACK/BLUE	VENTILATION FANS
6	10 AMPS	RED	SLATE/BLUE	REAR LIGHTS
7	10 AMPS	RED	YELLOW/WHITE	12V SOCKETS/TV AMPLIFIER/ENTERTAINMENT
8	5 AMPS	TAN	BROWN/YELLOW	PERMANENT SUPPLY (RADIO/FRIDGE)
9	20 AMPS	YELLOW	BROWN/GREEN	VEHICLE BATTERY
10	20 AMPS	YELLOW	BROWN/BLUE	LEISURE BATTERY
11	10 AMPS	RED	BLACK/RED	HEATER FAN
12	15 AMPS	BLUE	-	CHARGER

TECHNICAL DATA

Base Vehicle Data

For all matters relating to the base vehicle, and particularly tyre pressures, refer to the base vehicle instruction book or if in doubt consult your local base vehicle commercial dealer.

Weights, Dimensions and Capacities

Before using your Auto-Sleeper you should be fully conversant with all matters relating to weights. The following definitions should be fully understood and then related to the tabulated base vehicle weight data.

Weights

Details of vehicle weights are found below, and are presented in the manner prescribed in the European Standard EN1646-2 for Payloads. All weights are in kilograms (kg).

Take care to ensure that heavy loads are stored low down in bed boxes and low cupboards, and distribute weight evenly side to side as far as possible.

Note 1: Please take care to ensure that you have allowed for the masses of all items you intend to carry in the motor caravan, e.g. passengers, optional equipment, essential habitation equipment and personal effects such as clothing, food, pets, bicycles, sailboards, sports equipment, etc.

Note 2: Warning - Under no circumstances should the maximum technically permissible laden mass of this motor caravan, or its individual axles, be exceeded.

DEFINITIONS

Maximum Technically Permissible Laden Mass (MTPLM)

The Maximum Technically Permissible Laden Mass is a figure given by the manufacturer of the base vehicle. It is the combined maximum permitted weight of the vehicle and all of its contents, both inside and out. The MTPLM is unaffected by the Auto-Sleeper conversion.

Mass in Running Order (MRO)

The Mass in Running Order is defined as the mass of the standard converted vehicle with bodywork including the following:

- Coolants (oil and water)
- 90% of automotive fuel
- Spare wheel
- Crockery
- Washer fluid
- Tools
- Driver (at 75 kg, 11st 12lb)
- Fire extinguisher

All other optional equipment whether on the base vehicle or part of the conversion is excluded from the mass in running order.

Mass of the User Payload

The Mass of the User Payload is the difference between the MPTLM and the MRO. It is the motor caravans carrying capacity for everything placed in or on the vehicle, including the passengers. Please note that a driver (at 75kg, 11st 12lb) is included in the MRO. Everything listed in italics below must be subtracted from the payload.

Mass of the Conventional Load

The Conventional Load is the mass of the passengers carried and must be subtracted from the payload. The “EC standard person” weighs 75kg (11st 12lb). The user should adjust the figure according to the mass and number of passengers carried. Motorhome Manufacturers designate passenger seats as being suitable for travelling, and provide seat belts accordingly. Multiplying the weight of the passengers by the number of passengers gives the Conventional Load. Please note that a driver (at 75kg, 11st 12lb) is included in the MRO.

Essential Habitation Equipment

For the purpose of EN1646-2, the mass of the Essential Habitation Equipment includes the mass of the following:

- the LPG cylinders, 90% full.
- the freshwater tank, 90% full.
- the water heater system, full.
- the waste water tank, empty.
- the toilet system flushing tank, full.
- the toilet system holding tank, empty.

All of these must be subtracted from the user payload.

Auto-Sleepers include the low voltage (230V) connection cable and the second battery in the mass in running order.

Options, Personal Effects and Accessories

When options, personal effects and accessories are fitted or carried the mass must be subtracted from the user payload. All optional equipment whether on the base vehicle or part of the conversion is excluded from the mass in running order. Personal effects are any items of any description carried by the vehicle.

To determine accurately if a vehicle is exceeding one of its maximum technically permissible laden masses, the vehicle with all of its load (that is passengers, contents, luggage and external load) should be weighed on a weighbridge.

You may wish to allocate the user payload to suit your own use. For example, to increase the available payload, the water system may be emptied. If the vehicle is not being used for camping the gas bottles can be left at home to increase the mass available for other items.

Gross Train Mass (GTM)

If you are towing a trailer with your Auto-Sleeper, the Gross Train Weight is the maximum allowable weight of the towing vehicle, the trailer and the mass of every item carried. The GTM is given by the base vehicle manufacturer and is unaffected by the Auto-Sleeper conversion. Please check your driving licence to ensure you are allowed to drive a vehicle combination at this weight.

Maximum Braked Trailer Mass (MBTM)

This is the maximum allowable weight of the trailer together with its load, provided the trailer has a braking system, which complies with the local Construction and Use Regulations. The MBTM is given by the base vehicle manufacturer and is unaffected by the Auto-Sleeper conversion.

MTPLM of the Axles

The individual axles also have MTPLM's. The sum of the two axle MTPLM's usually exceeds the overall vehicle MTPLM, but this does not mean you can load each axle to its maximum, because doing so would exceed the overall MTPLM of the whole vehicle.

WEIGHT AND DIMENSION DATA

WEIGHT DATA TABLE — **All weights in kg**

STRATFORD	2.2 Hdi	3.0 Hdi
Vehicle Designation	333 L2	333 L2
MTPLM	3300	3300
Mass in Running Order	2752	2817
Mass of the User Payload	548	483
Designated Passenger Seats (excluding driver)	1	1
Conventional Load @ 75kg per person	75	75
Essential Habitation Equipment	85	85
Personal Effects (standard minimum figure)	74	74
Remainder for Personal Effects / Options & Accessories	314	249
Awning	22	22
Microwave oven	10	10
Air conditioning unit, roof mounted	30	30
Gross Train Mass	5300	5800
MBTM	2000	2500
Axle Weights		
Front, in Running Order	1490	1555
Rear, in Running Order	1262	1262
MTPLM Front	1750	1750
MTPLM Rear	1900	1900

WEIGHT AND DIMENSION DATA (continued)

DIMENSIONAL DATA	All dimensions in mm
MODEL	**STRATFORD**
Base Vehicle Manufacturer	Peugeot
Base Vehicle Model	333 L2
Wheelbase	3450
METRIC DIMENSIONS	
Overall Length	5413
Overall Width (mirrors extended)	2508
Overall Width (mirrors folded)	2260
Overall Height	2590
Internal Height (maximum)	1890
Internal Height (minimum)	1860
Double Bed	1870 x 1220
Single Bed (nearside)	n/a
Single Bed (offside)	n/a
Overcab Bed	n/a
Fresh Water Tank Capacity (litres)	69
Waste Water Tank Capacity (litres)	40
Gas, Butane	25 Litres
Gas, Propane	25 Litres

IMPORTANT

To maximise the usage of fitted equipment in your motorhome it is essential that any accompanying manufacturers' literature is read fully. All recommended maintenance and preparation procedures should be followed. The information provided in this manual is only intended as a guide. If in any doubt consult your manufacturer appointed dealer, particularly before attempting to install extra equipment.

In the interests of safety, replacement parts for an appliance shall conform to the appliance manufacturer's specifications and should be fitted by him or his authorised agent.

MICROWAVE

Model: Daewoo KOR6L1B

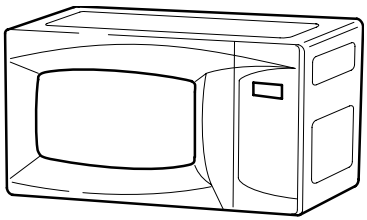

Microwave oven

Features:

- Oven volume in Litres: 20.
- Ten power steps.
- Maximum Wattage: 700.
- Turntable.
- Electronic time control.
- Touch control.

Separate operating instructions are supplied with this equipment.

SPINFLO TRIPLEX COMBINATION OVEN

BURNER OPERATION

The burners on this appliance have fixed aeration and no adjustment is required. The burners should flame as follows:

Propane - The flames should burn quietly with a blue/green colour with no sign of yellow tips.

Butane - Normally on initial lighting, a small amount of yellow tipping will occur and then slightly increases as the burner heats up.

IMPORTANT - The right hand control knob operates both the Grill and Oven burners. To ensure safe operation it is not possible to operate both burners at the same time.

Cautions:

- The two in line hob burners will support pans from 10 to 20cm. The single hob burner will support pans from 10 to 22cm. Care should be taken not to overload the appliance as reduced performance may result.
- When using small pans the flames should not spread beyond the base of the pan as this will reduce the efficiency of the burner. In the event of the burner flame being accidentally extinguished, turn off the burner control and do not attempt to re-ignite the burner for at least one minute.
- Avoid old or mis-shapen pans as these may cause instability.
- The lid must be opened fully prior to using the hotplate burners.

Using the hotplate gas burners

1. Ensure gas cylinder/supply is connected and turned on. In the event of a gas smell turn off at gas cylinder/mains and contact supplier.
2. Flame supervision: Each burner is controlled individually and is monitored by a thermocouple probe.

3. To light: Push in the control knob and turn anti-clockwise until the large flame symbol is in the vertical position, adjacent to the circle mark. Hold a lit match or taper to the burner and push the control knob in and hold. It is necessary to hold the knob depressed after the burner has ignited for approximately 10-15 seconds, to allow the thermocouple probe to reach temperature, before releasing the knob. Should the flame go out when the knob is released, the procedure should be repeated holding the knob depressed for slightly longer.
4. For models fitted with spark ignition the procedure is similar except that the burner can be ignited by depressing the ignition button, which is located on the fascia. If the burner has not lit within 15 seconds the control knob should be released and the burner left for at least one minute before a further attempt to ignite the burner is made.
5. For simmering, turn the knob further anti-clockwise so that the small flame symbol is adjacent to the mark.
6. To turn off: Turn the control knob clockwise as far as possible. Always make sure the control knob is in the off position when you have finished using the hotplate burners.

WARNINGS

- **Glass lids may shatter when heated. Turn off all burners before shutting the lid.**
- **Spillage on the surface of the lid should be removed before opening the lid.**

USING THE GRILL

WARNINGS

- **The grill MUST only be used with the door open.**
- **The heat deflector below the facia should be pulled out prior to lighting the grill. Never adjust the heat deflector position without using hand protection - i.e. oven gloves.**

Important

- The grill pan supplied is multi functional, for use in grill or oven.
- The handle design allows removal or insertion whilst the pan is in use.
- Always remove the handle when the pan is in use.
- The grill MUST only be used with the door open.

1. Ensure gas cylinder/supply is connected and turned on. In the event of a gas smell turn off at gas cylinder/mains and contact supplier.
2. T*o light:* Open door, push in the control knob and turn clockwise as far as possible. Hold a lighted match or taper to the burner and push the control knob in and hold. The burner should ignite and the control knob should be held in for 10-15 seconds before release. If the burner goes out, repeat procedure, holding control knob for slightly longer.
3. For models fitted with spark ignition the procedure is similar except that the burner can be ignited by depressing the ignition button, which is located on the fascia. Ignition must be carried out with the door open, and if the burner has not lit within 15 seconds the control knob should be released and the grill left for at least 1 minute before a further attempt to ignite the burner.
4. On first use of the grill, it should be heated for about 20 minutes to eliminate any residual factory lubricants that might impart unpleasant smells to the food being cooked. A non-toxic smoke may occur when using for the first time so open any windows and turn on mechanical ventilators to help remove the smoke.
5. Although the grill does heat up quickly, it is recommended that a few minutes preheat be allowed.
6. Flame Failure Device (FFD): the grill burner is fitted with a flame sensing probe, which will automatically cut off the gas supply in the event of the flame going out. In the event of the burner flames being accidentally extinguished, turn off the burner control and do not attempt to re-ignite the burner for at least one minute.
7. It is normal for the flames on this burner to develop yellow tips as it heats up, particularly on butane.
8. A reversible grill pan trivet enables the correct grilling height to be achieved. Grilling should be carried out on the middle shelf position.

Fast Toasting	trivet in high position
Grilling Sausages	trivet in high position
Grilling Steak/Bacon	trivet in high position
Grilling Chops, etc	trivet in low position
Slow Grilling	trivet removed

9. *To turn off:* Turn the control knob anti-clockwise to the vertical position. Always make sure the control knob is in the off position when you have finished grilling.

Caution: The grill must only be used with the door open.

USING THE OVEN

1. Ensure gas cylinder/supply is connected and turned on. In the event of a gas smell turn off at gas cylinder/mains and contact supplier.
2. *To light:* Open door, push in the control knob and turn anti-clockwise to full rate (gas mark 9). Hold a lighted match or taper to the burner and push the control knob in and hold. The burner should ignite and the control knob should be held in for 10-15 seconds before release. If the burner goes out, repeat procedure holding control knob for slightly longer.
3. For models fitted with spark ignition the procedure is similar except that the burner can be ignited by depressing the ignition button, which is located on the fascia. Ignition must be carried out with the door open, and if the burner has not lit within 15 seconds the control knob should be released and the oven left for at least 1 minute before a further attempt to ignite the burner.
4. Place the oven shelf in the required position and close the door. Set control knob to approximately gas mark 5 and heat the oven door for about 30 minutes to eliminate any residual factory lubricants that might impart unpleasant smells to the meals being cooked. A non-toxic smoke may occur when using for the first time so open any windows and turn on mechanical ventilators to help remove the smoke.
5. Although the oven does heat up quickly, it is recommended that a 10 minute preheat be allowed. The oven should be up to full temperature in about 15-20 minutes.
6. *To turn off:* Turn the control knob clockwise until the line on the control knob is aligned with the dot on the control panel.
7. Shelf: The shelf has been designed to allow a good circulation at the rear of the oven and is fitted with a raised bar to prevent trays or dishes making contact with the back of the oven. To remove a shelf, pull forward until it stops, raise at front and remove.

Oven temperature control

The temperature in the oven is controlled by a thermostatic gas tap and is variable over the range 130ºC to 240ºC. Approximate temperatures for the settings on the control knob are shown in the following table. The temperatures indicated refer to the centre of the oven and at any particular setting the oven will be hotter at the top and cooler towards the base. The variation between top and centre, and centre to bottom is approximately equivalent to one gas mark. Good use can be made of the temperature variation in several dishes requiring different temperatures may be cooked at the same time. In this way maximum benefit can be obtained from the gas used to heat the oven. Care should be taken not to overload the oven, adequate spacing being used to allow free circulation for heat.

Cooking guidelines

Best results will be obtained by the shelf positions in this guide - please see chart on next page. It is not necessary to preheat the oven but advisable for a range of dishes. The oven is capable of full temperature in 15-20 minutes.

Most cookery books give details of the shelf positions and gas mark settings for each recipe. If in doubt about a recipe you intend to use, study the recipe carefully then find a similar dish in our guide and use our shelf position and gas mark setting recommendation. Shelf positions are from the top down. When roasting with aluminium foil care must be taken that the foil does not impair circulation or block the oven flue outlet.

Important: Always ensure food is properly cooked prior to serving.

Do's and Don'ts

Do read the user instructions carefully before using the appliance for the first time.

Do allow the oven to heat before using for the first time, in order to expel any smells before the introduction of food.

Do clean the appliance regularly.

Do remove spills as soon as they occur.

Do turn handles away from the front of the cooker so that they cannot be caught accidentally.

Do always use oven gloves when removing food shelves and trays from the oven.

Do check that controls are in the off position when finished.

Do not allow children near the cooker when in use. All outer surfaces will get hot when in use.

Do not allow fats or oils to build up in the oven trays or base.

Do not use abrasive cleaners or powders that will scratch the surfaces of the appliance.

Do not under any circumstances use the oven as a space heater.

Do not put heavy objects onto open grill and oven doors.

Leaks

If a smell of gas becomes apparent, the supply should be turned off at the cylinder IMMEDIATELY. Extinguish naked lights including cigarettes and pipes. Do not operate electrical switches. Open all doors and windows to disperse any gas escape. Butane/Propane gas is heavier than air, any escaping gas will therefore collect at low level. The strong unpleasant smell of gas will enable the general area of the leak to be detected. Check that the gas is not escaping from an unlit appliance. Never check for leaks with a naked flame, leak investigation should be carried out using a leak detector spray.

Gas Mark	Temperature			
1/4 - 1/2	265-275ºF	130-135ºC	Very cool	Meringues
1	285	140	Cool	Stewed fruit
2	300	150	Cool	Rich fruit cake
3	330	165	Warm	Baked custard
4	355	180	Moderate	Victoria sandwich
5	385	195	Fairly hot	Whisked sponges
6	410	210	Hot	Shortcrust pastry
7	430	220	Hot	Bread, scones
8	445	230	Very hot	Puff pastry
9	465	240	Very hot	Quick browning

Dish	Gas Mark	Shelf Position	Cooking Time
Scones	7	2	8-15 mins
Small cakes	5	2	15-25 mins
Victoria sandwich	4	2	20-30 mins
Very rich fruit cake	2	2	Approx. 60 mins per 500g
Puff pastry	8	2	15-30 mins
Flaky pastry	7	2	15-30 mins
Shortcrust pastry	6	2	15-55 mins
Shortbread fingers	3	2	25-30 mins
Ginger nuts	5	2	12-16 mins
Rice pudding	2	3	100-120 mins
Baked custard	3	3	50-60 mins
Fruit crumble	5	3	30-40 mins
Beef	3	3	25 mins per 500g plus 25 mins
	7	3	15 mins per 500g plus 20 mins
Pork	3	3	30 mins per 500g plus 35 mins
	7	3	25 mins per 500g plus 25 mins

SEITZ CONCERTINA BLINDS

The windows of the habitation area are fitted with concertina blinds and flyscreens.

The flyscreens pull down from the top, the concertina blinds up from the base and a combination of both may be achieved by clipping both units together in the centre to adopt the required position. It should be remembered that both the flyscreens and concertina blinds are relatively delicate and those in the living area should be treated with care. They should be kept in a dry and dust-free state, it is advised that the mechanisms are only lightly lubricated when they become a little stiff and inoperative - otherwise no maintenance is needed.

The concertina blinds are manufactured from a paper type material and thus cleaning solvents and aerosols should be kept well clear from them.

Unlike Seitz roller blinds, they will not need to be re-tensioned - any problems that should arise should be addressed to your Auto-Sleeper dealer or the Motorhome Service Centre at Willersey.

EXTERNAL TV SOCKET

An external weatherproof cable entry point for TV and satellite cable is fitted to the offside of the motorhome.

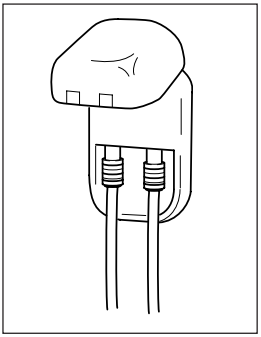

WARM AIR & HOT WATER HEATING

A Truma liquid gas Combi 4E warm-air heater, with integrated hot water boiler, is fitted under the rear end of the offside sofa. It operates on LPG and/or 230V electricity depending on the chosen mode of operation.

In winter operation the heater can be used to heat the room and simultaneously warm water. If only warm water is required, select summer operation.

At a temperature of approximately 3 deg C the automatic frost control safety/drain valve will open and drain the boiler.

Three different options are available for operating the unit.

Gas operation only: Propane/butane for autonomous use.

Electrical operation only: 230V for stationary use on camp sites.

Mixed operation: Gas and electrical operation - only possible in winter mode.

Winter operation

In winter operation, the unit automatically selects the required power setting according to the temperature difference between the temperature set on the control panel and the current room temperature. When the boiler is filled, the water is automatically heated as well. The water temperature depends on the selected operation mode and the heater output.

All three energy selection options can be used for winter deployment.

With gas operation the unit automatically selects the output level that is required.

Depending on the fuse protection at the camping site, power of 900W (3.9A) or 1800W (7.8A) can be manually selected for electrical operation.

If more output is required (e.g. heating up or low outside temperatures) gas or mixed operation should be selected so that enough heating power is always available.

With mixed operation, 230V electrical operation is preferred if the power requirement is low (e.g. for maintaining the room temperature). The gas burner is not enabled until the power requirement is higher, and is the first to switch off during heat-up operations.

Summer operation (boiler operation only)

Gas operation or 230V electrical operation is used for hot water preparation. The water temperature can be set to 40 degºC or 60ºC.

With gas operation the water is heated at the lowest burner setting. Once the water temperature is reached, the burner switches off.

Depending on the fuse protection at the camping site, power of 900W (3.9A) or 1800w (7.8A) can be manually selected for electrical operation.

Note: Mixed operation is not possible. With this setting the unit automatically selects electrical operation. The gas burner is not enabled.

OPERATING INSTRUCTIONS

Caution: Always observe the operating instructions and “Important operating notes” prior to starting. The vehicle owner is responsible for the correct operation of the appliance.

Note: Before using for the first time, it is essential to flush the entire water supply through with clean warm water. If the heater is not being used, always drain the water contents if there is a risk of frost. *There can be no claims under guarantee for damage caused by frost!*

Power selector switch

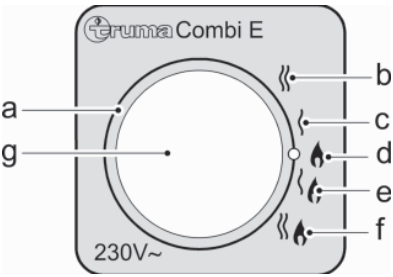

a = Power selection rotary switch
b = Electric operation 230V, 1800W.
c = Electric operation 230V, 900W.
d = Gas operation.
e= Mixed operation* (gas and electricity, 900W).
f = Mixed operation* (gas and electricity, 1800W).
g = Yellow LED on = Electrical operation

* *Winter mode only. In summer mode the unit automatically selects electric operation at the pre-selected electrical power of 900W or 1800W.*

Note: Switching on the electric heating elements as well does not increase the maximum heating power.

Control panel

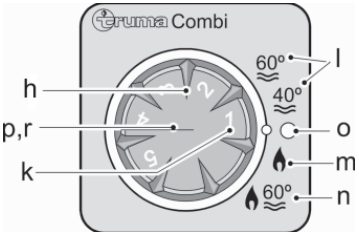

h = Rotary switch for room temperature (1-5)
k = green LED lit “Operation”
green LED blinking
“after-running” is active in order to reduce the unit’s temperature
l = Summer operation (water temperature 40ºC or 60ºC)
m = Winter operation (heating without water temperature monitoring or with drained water system)
n = Winter operation (heating with water temperature monitoring)
o = Rotary “Off” switch
p = Yellow LED lit “Boiler heat-up phase”
r = Red LED lit, red LED blinking “Failure”

Note: The LEDs are visible only when the unit is switched on.

Room thermostat

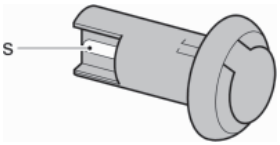

s = Room

The thermostat setting on the control panel (1-5) must be determined individually depending on the heating requirement and the type of vehicle. For an average room temperature of about 23ºC, we recommend a thermostat setting of about 4.

To measure the room temperature, an external room temperature sensor is located in the vehicle. The location of the sensor is determined individually by the vehicle manufactuer, depending on the vehicle type; consult the operation instructions for your vehicle for further details.

FrostControl (safety/drain valve)

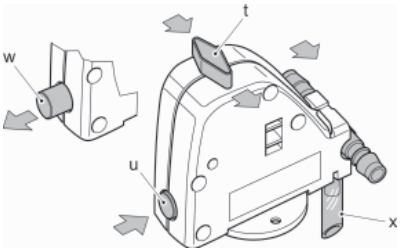

t = Rotary switch position “Operation”
u = Push button position “Closed”
w = Push button position “Drain”
x = Drainage muff (led outside through floor of vehicle)

FrostControl is a currentless safety/drain valve. When there is a danger of frost, it automatically drains the contents of the boiler through a drainage muff. If excessive pressure is present in the system, pressure will be automatically intermittently equalised through the pressure relief valve.

Closing the drain valve

Check if the rotary switch is set to “Operation” (position t), meaning that it is parallel to the water connection and engaged.

Close the drain valve by activating the push button. The push button must engage in position (u) “closed”.

It can be manually closed with the push button (position u) and then the boiler filled only when the temperature at the drain valve is above approximately 7ºC.

Truma can provide a heating element (part no. 70070-01) as an accessory; it is inserted into FrostControl and warms it up to about 10ºC when Combi is switched on. This means that the boiler can be filled after a shorter time, irrespective of the temperature in the installation compartment.

Automatic opening of the drain valve

When the temperature is below approximately 3ºC at the drain valve, the drain valve will open automatically, the push button moves out (position w) and the water in the boiler drains out through the drainage muff (x).

Manual opening of the drain valve

Turn the rotary switch by 180º until it engages, whereby the push button moves out (position w). The water in the boiler drains out through the drainage muff (x).

The FrostControl drainage muff (x) must be free of contamination (slush, ice, leaves, etc.) at all times so the water can drain out easily. *No warranty given for frost damage.*

Taking into operation

Note: Heating is possible without restrictions with gas, electrical and mixed operation, with or without water.

Check to make sure the cowl is unobstructed. Be sure to remove any covers that may be present.

Turn on the gas cylinder and open quick-acting valve in the gas supply line.

Check whether the power supply fuse protection on the camp site is adequate for the 900W (3.9A) or 1800W (7.8A) that have been selected using the power selector switch.

The cable drum must be fully unwound in order to prevent the power cable from overheating.

Summer operation (boiler operation only)

Select gas or electrical operation using the power selector switch. Illumination of the yellow LED (g) on the power selector switch indicates that the unit is operating with 230V.

Note: Mixed operation (gas and electrical) is not possible in summer mode. With this setting the unit automatically selects electrical operation with a pre-selected power setting of 900W or 1800W.

Move the rotary switch on the control panel to position (l - summer operation) 40ºC or 60ºC. The green (k) and yellow (p) LEDs light up.

When the selected water temperature is reached (40ºC or 60ºC) the heater shuts off and the yellow LEd (p) goes off.

Winter operation

*Heating **with** water temperature monitoring:*

Select gas, electrical or mixed operation using the power switch. Illumination of the yellow LED (g) on the power selector switch indicates that the unit is operating with 230V.

Move rotary switch on control panel to operating position (n).

Set the rotary switch (h) to the desired thermostat setting (1-5). the green LED (k) for operation is lit and simultaneously indicates the position of the selected room temperature. The yellow LED (p) indicates the water's heat-up phase.

The device automatically selects the required power setting in accordance with the temperature difference between the temperature selected on the control panel and the current room temperature. When the room temperature selected on the control panel is reached, the heater switches back to the smallest setting and heats the water to 60ºC. Once the water temperature is reached, the heater switches off and the yellow LED (p) goes out.

The warm air fan can continue to run in order to cool the unit (after-run).

*Heating **without** water temperature monitoring:*

Select gas, electrical or mixed operation using the power switch. Illumination of the yellow LED (g) on the power selector switch indicates that the unit is operating with 230V.

Move rotary switch on control panel to operating position (m).

Turn the rotary switch (h) to the desired thermostat setting (1-5). The green LED (k) for operation is lit and simultaneously indicates the position of the selected room temperature. The yellow LED (p - water's heat-up phase) will be lit only when the water temperature is below 5ºC!

The device automatically selects the requires power setting in accordance with the temperature difference between the temperature selected on the control panel and the current room temperature. Once the room temperature selected on the control panel has been reached, the heater switches off. The warm air fan continues to run at slow speed until the out-going air temperature (on the unit) has fallen to 40ºC or less.

If the boiler is filled, the water will automatically be heated at the same time. The water temperature is then dependent on the heating output being given off, and the duration of heating required to reach the desired room temperature.

*Heating **with drained** water system:*

Select gas or electrical operation using the power selector switch. Illumination of the yellow LED (g) on the power selector switch indicates that the unit is operating with 230V.

Move rotary switch on control panel to operating position (m).

Turn the rotary switch (h) to the desired thermostat setting (1-5). The green LEd (k) for operation is lit and simultaneously indicates the position of the selected room temperature. the yellow LED (p) will be lit only when the temperature of the unit is below 5ºC!

Depending on the operating mode, the unit will automatically select the required power level according to the temperature difference between the setting on the control panel and the current room temperature. Once the room temperature selected on the control panel has been reached, the heater switches off. The warm air fan continues to run at slow speed until the outgoing air temperature (on the unit) has fallen to 40ºC or less.

Switching off

Switch off heater at control panel using rotary switch (position o). The green LED (k) goes off.

Note: If the green LED (k) blinks after switching off, then the unit's after-running is active in order to reduce the unit's temperature. This will end after a few minutes and the green LED (k) will go off.

CAUTION: Always drain water contents if there is risk of frost!

If the appliance is not to be used for a prolonged period, close the quick-acting valve in the gas supply line and turn off the gas cylinder.

Gas operation fault

If a fault occurs during gas operation the red LED (r) on the control panel illuminates.

Please consult the troubleshooting list for possible causes.

A reset (fault reset) is carried out by switching off, waiting until all LED's on the control panel have stopped flashing, and then switching the heater on again.

Note: If a window to which a window switch has been fitted is opened, the heater stops operating and the red LED (r) flashes. The heater continues operating when the window is closed.

Electrical operation fault

If a fault occurs during electrical operation the yellow indicator lamp (g) on the power selector switch goes off.

Possible causes can be found in the troubleshooting list.

Note: If the 230V power supply is interrupted for just a brief period of approximately one second during operation, the heater will subsequently resume as normal.

Filling the water heater

Check if the rotary switch for the drain valve (FrostControl) is set to "Operation", meaning that it is parallel to the water connection and engaged.

Close the drain valve by pushing the push button until it engages.

Note: When the temperature at FrostControl is below about 7ºC, *first* switch on the heater to warm the installation compartment and FrostControl. After several minutes, when the temperature at FrostControl is above 7ºC, the drain valve can be closed.

Switch on power for water pump (main or pump switch).

Open hot water taps in kitchen and bathroom (set pre-selecting mixing taps or single-lever fittings to "hot"). Leave the fittings open for as long as it takes for the boiler to displace the air and fill up, and the water to flow without interruption.

Note: If just the cold water system is being operated, without using the water heater, the heater tank also fills up with water. To avoid frost damage, the boiler must be drained through the drain valve, even if it was not operated.

WARNING: When connecting to a central water supply (rural or city mains), a pressure reduction valve must always be installed to prevent pressures above 2.8 bar from developing in the water heater.

Draining the water heater

Switch off power to water pump (main or pump switch).

Open hot water taps in kitchen and bathroom.

In order to check the water that is flowing out, place an appropriate container (capacity 10 litres) beneath the drain valve (FrostControl) drainage muff (x).

Turn the rotary switch on the drain valve by 180º until it engages, whereby the push button moves out and the drain valve opens.

Check whether all of the water in the boiler (10 litres) has been drained into the container via the drain valve.

There shall be no claims under guarantee for damage caused by frost!

Maintenance

Only original Truma parts may be used for maintenance and repair work!

The materials in the device that come into

contact with water are drinking water safe.

Bio-film, deposits and limescale must be removed using chemicals to protect the unit from infestation by micro-organisms. Only Chloride-free products must be used in order to prevent damage to the unit.

The effectiveness of the use of chemicals to combat micro-organisms in the unit can be increased by heating the water in the boiler to 70ºC at regular intervals.

Move power selector switch to gas operation (d) to do this.

Move the rotary switch on the control panel to position (l - summer operation) 60ºC. the green (k) and yellow (p) LEDs light up.

Note: Once the water in the boiler has reached a temperature of 60ºC, the burner will switch off and the yellow LEd (p) will go out. The unit must stay switched on for at least 30 minutes and no warm water may be removed. The residual heat in the heat exchanger will heat the water up to 70ºC.

Fuses 12V

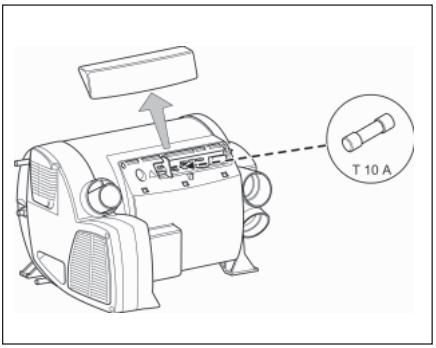

The fuse is in the electronics beneath the connection cover. Replace the unit's fuse only with an identical fuse.

Device fuse: 10A - slow - (T 10A).

Fuses 230V

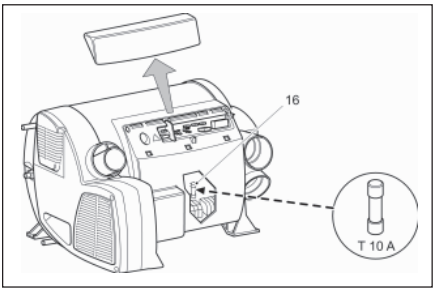

CAUTION: The fuse and the power supply lines must only be replaced by an expert!

WARNING: The unit must be disconnected from the mains (all poles) before opening the electronic housing lid.

The fuse in the power electronics (16) beneath the electronic housing lid.

This fine fuse must always be replaced with a fuse of the same type: 10A, slow, interrupting capacity "H".

Overheating protection 230V

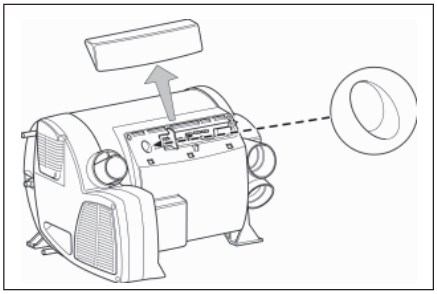

The 230V heating facility has a mechanical overheating switch. If the 12V power supply is interrupted during operation or during the after-run period, for example, the temperatures within the unit could activate the overheating protection.

To reset the overheating protection, allow heater to cool, remove connection cover and press red reset button.

TROUBLESHOOTING LIST

Fault	Cause	Rectification
After switching on (winter and summer operation) none of the LEDs are lit.	- No operating voltage. - Device fuse or vehicle fuse defective.	- Check battery voltage (12V). - Check all electrical plug connections. - Check the unit or vehicle fuse and replace if necessary (see fuses).
The green LED comes on when the unit is switched on (by means of the ZUCB time switch), but the heater does not operate.	- The temperature setting on the control panel is lower than the room temperature.	- Select higher room temperature at the control panel.
The green LED comes on when the unit is switched on (by means of the ZUCB time switch), but the heater does not operate.	- Open window above cowl. (window switch). - Battery voltage is too low < 10.5V.	- Close window. - Charge battery.
After the heater is switched on, the green LED is lit and the red LED blinks.	- Electronics are defective.	- Please contact the Truma Service Centre.
Approximately 30 seconds after the heater is switched on, the red LED is lit.	- Gas cylinder or quick-closure valve in the gas line is closed. - Combustion air infeed or exhaust outlet is sealed.	- Check gas supply and open valves. - Inspect openings for contamination (slush, ice, leaves, etc.) and remove contamination if necessary.
After operating for a longer period of time, the heater switches to failure.	- Hot-air outlets blocked. - Recirculated air intake - Gas pressure regulator iced up. - Butane content in the gas cylinder too high.	- Check individual outlet apertures. - Remove blockage from recirculated air intake. - Use regulator heating (EisEx). - Use propane (at temperatures below 10ºC in particular, butane is unsuitable for heating purposes).
Green and red LEDs blink after heater is switched off.	- Unit was switched off during failure. After-running is active in order to reduce the unit's temperature.	- After-running will switch off after a few minutes. Only at that time will a failure reset be possible (switch off and then back on).
Green LED blinks after heater is switched off.	- After-running is active in order to reduce the unit's temperature.	- No failure. After-running will switch off after approximately 5 minutes. The heater can be switched back on at any time during the after-running phase in winter operation (in summer operation only after two minutes).
When the device is switched on in electrical operation the red LED on the control panel flashes, the yellow LED on the power selector switch does not illuminate and the heater does not heat up.	- No 230 V operating voltage. - 230 V fuse defective. - Overheating protection has activated.	- Check 230 V operating voltage. - Check 230 V fuse and replace if necessary. - Reset overheating protection. Allow heater to cool, remove connection cover and press reset button.

WATER SUPPLY

Fault	Cause	Rectification
After the heater is switched off, the drain valve opens (FrostControl).	- Temperature at drain valve less than approx. 3ºC.	- Switch the heater on. If the temperature is below approximately 3ºC, the drain valve will open automatically! If the heater is not in operation, the drain valve can be reclosed only when the temperature is approximately 7ºC or higher! - Use heating element for FrostControl.
The drain valve (FrostControl) can no longer be closed.	- Temperature at drain valve is below approximately 7ºC. - Rotary switch is not at “Operation”.	- Switch the heater on. If the heater is not in operation, the drain valve can be reclosed only when the temperature is approximately 7ºC or higher! - Turn the drain valve’s rotary switch to “Operation”, then press the push button until it engages.
Water flows intermittently from the FrostControl drain muff.	- Water pressure too high.	- Check pump pressure (max. 2.8 bar). If connected to a central water supply (rural or urban connection), a pressure reducer must be used, which will prevent pressures higher than 2.8 bar entering the boiler.

If these measures do not remove the failure, please contact the Truma Service Centre.

REFRIGERATOR

Introduction

Your vehicle is fitted with a Waeco CoolMatic CR-80 electrically powered compressor refrigerator. It features a full width freezer compartment with a 3 star rating, and an interior light.

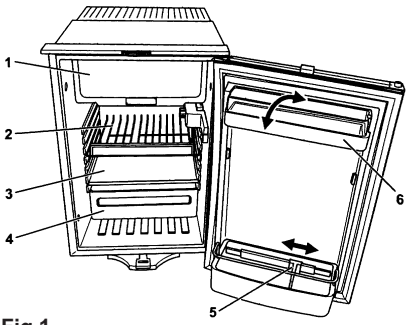

Fig 1

Features:

1. Freezer compartment
2. Wire shelf, folds so that bottles can be stood upright
3. Shelf
4. Fruit & vegetable compartment
5. Bottle restraint, to hold bottles in door
6. Storage compartment with hinged lid

Control elements:

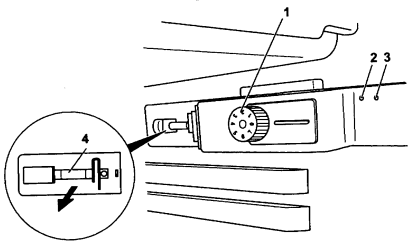

Fig 2

1. Temperature controller
2. Green LED light when operating
3. Red LED light shows fault (see later for explanation)
4. Interior light

Using the refrigerator

The refrigerator conserves fresh foodstuffs. The freezer compartment conserves frozen foodstuffs and freezes fresh foodstuffs.

Energy saving tips

- Always let hot food cool down before placing it in the refrigerator
- Do not open the door more often than necessary
- Do not leave the door open longer than necessary
- Defrost your refrigerator as soon as a layer of ice forms
- Avoid unnecessarily low temperature settings
- Clean dust and dirt from the condenser at regular intervals

Switching on

Before first use it is recommended that the inside of the refrigerator is cleaned, and that it is allowed to operate for at least eight hours before putting any food into it.

Switch the refrigerator on by turning the temperature control clockwise. See fig 2

Note that there will be a delay of about 60 seconds before the compressor starts up.

Setting the temperature

The temperature can be set to any level using the control knob. The built-in thermostat regulates the temperature as follows:

- 1 = least cooling
- 7 = most cooling

Note that the cooling capacity can be influenced by:

o the ambient temperature
o the amount of food to be conserved
o the frequency with which the door is opened

Conserving foodstuffs

You can conserve foodstuffs in the refrigerator. The time for which the food can be conserved in this way is usually stated on the package.

Caution:

- do not put warm food into the refrigerator
- do not place glass containers of liquid in the freezer compartment
- do not overload the freezer compartment

Note that food which can easily absorb tastes and odours, and products with a high alcohol content, should be stored in air-tight containers

The refrigerator is divided into different zones with different temperatures, with the colder zones being immediately above the fruit and vegetable drawer, near the back wall.

Defrosting the refrigerator

The condensation resulting from operation is collected in the drip tray at the back of the refrigerator. Empty this when required.

Defrosting the freezer

WARNING: Never use mechanical tools to remove ice or loosen objects stuck to the device.

To defrost the refrigerator proceed as follows:

- Remove the contents
- If necessary place the contents in another appliance to keep them cool
- Set the temperature control knob to ‘O’
- Leave the door open

Switching off and long term storage

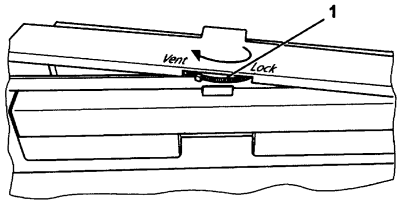

Fig 3

If the refrigerator is not to be used for a long period proceed as follows:

- Set the temperature control knob to ‘O’
- Clean the refrigerator
- Turn the locking wheel (See fig 3) anti-clockwise to the end stop (‘Vent’)
- Close the door until it latches. This will lock the door ajar thus preventing smells from arising.

Replacing the interior light

If the interior light in the refrigerator is faulty, you can replace the bulb (12V, 3W) by

- Remove the cover
- Pull the bulb (see fig 2) out of the sheet metal contacts
- Slide the new lamp between the metal contacts until it snaps into place

Cleaning and care

- Do not use abrasive cleaning agents or hard objects during cleaning as these can damage the refrigerator
- Never use hard or pointed tools to remove ice or loosen objects which have frozen in place
- As soon as the refrigerator becomes dirty clean it with a damp cloth
- Make sure that no water drips into seals as this can damage the electronics
- Wipe the refrigerator dry with a cloth after cleaning

Troubleshooting

The significance of the red LED light (Fig 2, item 3)

For operational faults it flashes several times. The number of flashes depends on the type of fault. Each flash lasts for 1/4 second. After the series of flashes a pause follows. The sequence for the fault is repeated every 4 seconds.

Number of flashes	Fault	Possible cause
1	Supply voltage	The supply voltage is outside the set range
2	Excessive fan current	The fan loads the electronics unit with more than 1A
3	The motor does not start	The rotor is jammed. The pressure difference in the cooling system is too high (greater than 5 bar)
4	Speed too low	If the cooling system is overloaded, the minimum speed of the motor (1850 rpm) cannot be maintained
5	Overheating of the electronics unit	If the cooling system is overloaded, or the temperature is set too high, the electronics can overheat

Technical data

Model……..... CR-80

Usable capacity, incl freezer compartment… 80 litres

Freezer compartment capacity…….... 7.9 litres

Main compartment temperature range……+10°C to 0°C

Freezer compartment temperature range……0°C to -18°C

Rated current…….……..... 5.9 A at 12V

Average power consumption……48 W

Appliance is CFC free

THETFORD CASSETTE C200CS TOILET

Introduction

The toilet is made up of two parts: a permanently fixed toilet and a waste tank that is accessible from the outside. The removable waste tank is located under the toilet and can be removed via an access door on the outside of the motorhome.

Preparing for use

Open the access door on the outside of your motorhome.

1. Remove the waste tank by pulling the safety catch upwards.
2. Pull the waste tank outward to the stop. Tip it slightly and take the tank fully out.
3. Place the tank upright and turn the emptying spout upwards.
4. Remove the cap, with the measuring cup inside, from the emptying spout and pour the stated quantity of toilet fluid into the waste tank. This avoids unpleasant smells in the waste tank and keeps the inside of the waste tank clean. Next add approximately 2 litres of water - enough to ensure that the bottom of the waste tank is covered. Screw the cap back onto the emptying spout. Turn the emptying spout back to its original position.

WARNING: Never add toilet fluid via the valve blade or via the toilet bowl.

5. Slide the waste tank back into its original position via the access door.

Note: Never use force if you cannot get the tank back into place easily. This may cause serious damage.

6. Make sure that the waste tank is secured with the safety catch. Shut the access door and lock it.
7. Turn the toilet bowl to the desired position.
8. Run some water into the bowl by pressing the flush button once.
9. The toilet may be used with the blade open or closed. To open the valve, pull the valve handle under the toilet bowl towards you. Your toilet is now ready to use.
10. After use, open the valve blade (if it is still closed) and flush the toilet by pressing the flush button. Close the toilet valve after flushing.

Note: Do not leave water in the bowl if the toilet is not being used. This does not help to reduce unpleasant smells and only leads to flooding.

WARNING: Do not travel with water in the flush tank of your toilet. Failure to adhere to this notice may result in water damage to your motorhome.

Emptying

The waste tank has a capacity of 17 litres and must be emptied, at the latest, when the warning lamp is lit. It is advisable to empty the waste tank earlier. The warning lamp illuminates when the waste tank contains in excess of 15 litres. This indicates that a capacity of 2 litres is left, which will allow approximately five uses.

Note: Do not allow the waste tank to become too full.

11. Make sure that the valve blade is closed. Open the access door located outside the vehicle. Pull the safety catch upwards and remove the waste tank.
12. Carry the tank by the handles to a normal toilet or to a legal waste disposal site. Place the waste tank upright on the ground and turn the emptying spout upwards.
13. Remove the emptying spout cap. Hold the waste tank by the upper handle nearest to the emptying spout. Hold the rear handle with your other hand so that you can operate the vent plunger with your thumb. Keep the vent plunger pressed in to ensure the tank is emptied without splashing.

Note: The vent plunger should only be pressed once the emptying spout is pointing downwards!

1

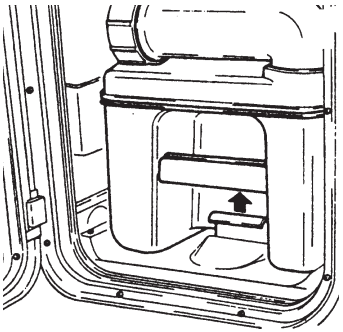

2

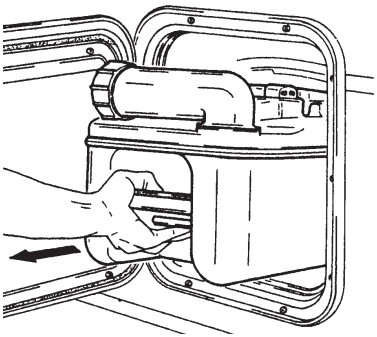

3

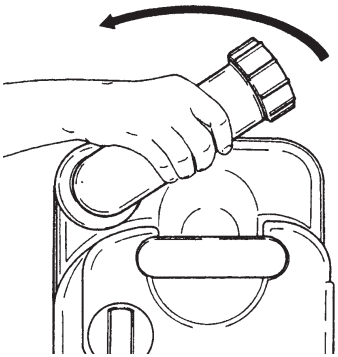

4

5

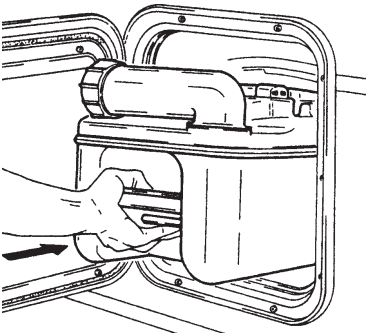

6

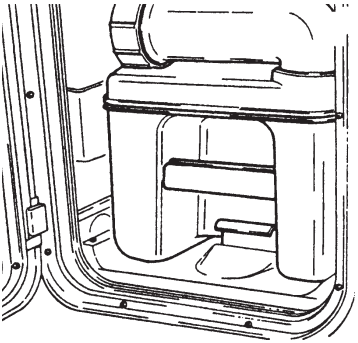

7

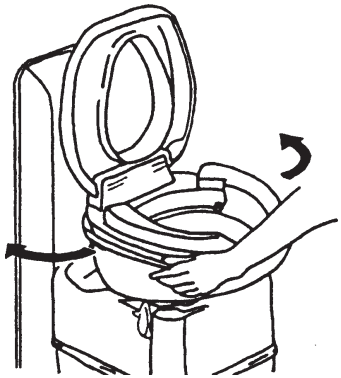

8

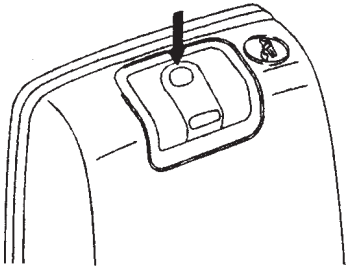

9

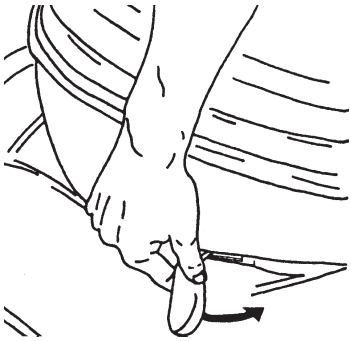

10

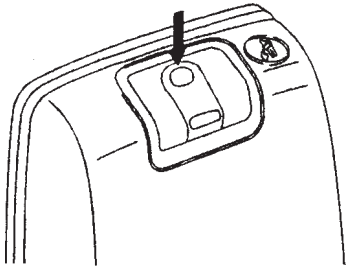

11

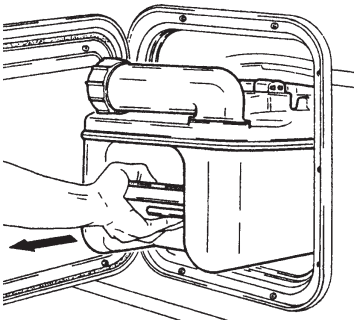

12

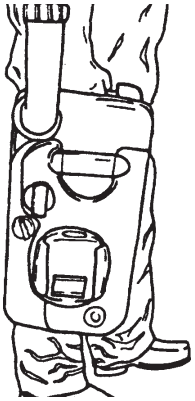

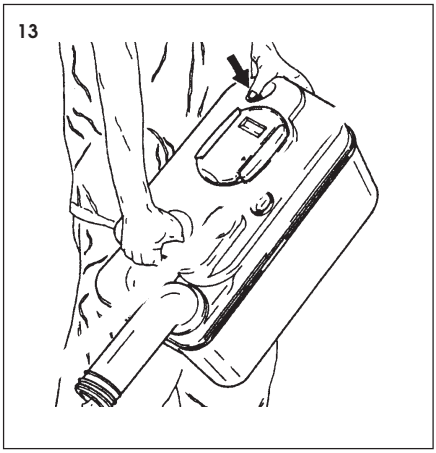

Storage

First empty the central water system. Press the flush button until the remaining water has been pumped away. Empty the waste tank. To allow the tank to dry, do not place the cap back on the emptying spout of the waste tank.

Cleaning and maintenance

The waste tank seal, the automatic pressure release vent seal and the cap seal must be cleaned regularly. When the toilet is being used frequently, monthly cleaning is generally sufficient.

We advise cleaning the seals and valve blade with Thetford Plastic Cleaner.

Note: Never use household cleaners (bleach, solvents or other powerful cleaning agents). These may cause permanent damage to the seals and other toilet components.

Toilet:

- Squirt Thetford Plastic Cleaner in the toilet.
- Flush the bowl with water and wipe down the rest of the toilet with a damp cloth.
- Thoroughly clean the seals and valve blade, using Thetford Seal Lubricant and wipe them over with a cloth or a piece of toilet paper. Repeat the above operation if the seal and blade are dirty or if opening and closing the blade is getting more difficult.

Note: Never use Vaseline or any vegetable oil. These may cause leakage.

If the toilet will not be used for a long period, it is advisable to clean the seals and coat them lightly with Thetford Seal Lubricant. This will ensure that they remains in good condition (supple).

N.B. The valve blade seal is a part of the toilet that is subject to wear. Depending on the extent and manner of serivcing, after a certain period the seal will lose quality and must be replaced.

Winter use

You can continue to use your Thetford cassette toilet in cold weather as long as the toilet is situated in a heated location. If not, there is a risk of freezing. In this case we advice that the toilet is drained.

TELEVISION (where fitted)

If your vehicle is fitted with an Avtex TV/DVD then please note the following points:

- For detailed operating instructions and specification please refer to the literature supplied with the vehicle.
- Avtex operate a helpline for users experiencing problems with any of their products. Whether it is difficulty with tuning, setting up the equipment or a physical malfunction then contact their Service Department on 02920 020279 (normal business hours).
  They will be able to talk to you through many issues, but if there is still a problem they will arrange for a courier to collect your set from any UK postcode (including campsites) for return to their factory overnight. The repaired equipment will normally be despatched the following day for return to the customer.
  This service is free during the warranty period. After the warranty has expired the service is still available but there will be a charge.
- **Warning:** If for any reason the TV is removed from the support bracket provided, ensure that when it is re-fitted that only the original screws (or ones of the same length) are used. If longer screws are used they may damage the internal components of the equipment.

OMNI-STEP ELECTRIC STEP

Your vehicle is fitted with an electrically operated side step. In the event of the step being left extended a buzzer, positioned under the dashboard, will sound (when the ignition is switched on) and the step will self-retract.

Maintenance

Dirt and frost can prevent the step from operating properly. In this case the moving parts should be cleaned or defrosted. All points of movement are layered in maintenance-free bearings.

Consult manufacturers literature for further maintenance details.

INTERNAL LAYOUT

General

The Stratford is designed as a two berth model, with a rear end lounge which easily converts into a transverse double bed.

Cab Seats

Both the reclining cab seats have full forward and rearward movement by releasing the catch on the front of the seat and sliding it to the required position.

Accommodation Seating

The Stratford features a rear lounge with twin sofas with lift up seat bases giving access to the under seat storage.

Please note that Auto-Sleepers advise against the retrofitting of additional seat belts.

Security

Passengers are reminded that it is a legal requirement to wear the seat belts provided whilst the vehicle is in motion.

Table

Two tables are supplied with your vehicle. A large free-standing table with folding legs can be positioned between the sofas in the lounge area. When not required this table should be securely stowed in the overcab storage area. A smaller pedestal leg table can be fitted into the brackets on the bathroom side panel for use in conjunction with the swivelling passenger seat. When not in use the table top and leg should be stowed in the wardrobe.

Caution: The table must be stored when the vehicle is in motion.

Kitchen Area

The kitchen area is positioned on the nearside of the vehicle and features a Spinflo Triplex combination oven, grill and hob with three gas burners. Adjacent to this is a stainless steel sink, with cutlery rack and drainer, concealed by a Chinchilla glass lid which may also be used as a chopping board. The sink is fed by a chrome mixer tap mounted to the right of the sink. Beneath the sink there is a drawer with a built in cutlery tray, and below that is a Waeco electric compressor refrigerator with full width freezer compartment and interior light. Below the cooker is a pan storage drawer, behind which is found the red gas isolation tap for the cooker. For explanation of the symbols on these taps, please refer to page 7-8.

Extra serving space is provided by a worktop extension which pulls up on the side of the kitchen unit, and all kitchen shelves and worktops are plastic coated for easy cleaning should a spillage occur.

On the entrance door side of the kitchen unit is a switch for the electric step, a 230V socket and a courtesy light to illuminate the stepwell. The light will turn itself off after about 30 seconds if the door is closed, or about 10 minutes if the door is left open. Another 230V socket is fitted on the lounge side of the kitchen unit.

Above the sink is a unit housing the microwave oven, with a storage shelf above that. A mini Heki roof ventilator is fitted to the ceiling above the kitchen, with an alternative extractor fan unit, or an air conditioning unit available as an option.

Above the side entrance door is located the electrical control panel, with scrolling menu display and programmable control of all the vehicles electrical services. It incorporates a fresh water level indicator and master switches for the water pump and 12 volt circuits Adjacent to this is a switch which controls the exterior awning light.

A smoke alarm is fitted to the panel above the entrance door, and a fire extinguisher is located on the inboard side of the driver’s seat.

Bathroom

The bathroom features separate toilet and shower areas. The toilet is a Thetford cassette type which is plumbed into the vehicle water system and so does not have a flush tank to be filled. The toilet is serviced from the outside of the vehicle via a door on the offside. The toilet area also features chrome fixtures and fittings, and an overhead storage area for bottles etc. There is a window with a concertina blind and an

ARRANGEMENT OF EQUIPMENT (STRATFORD)

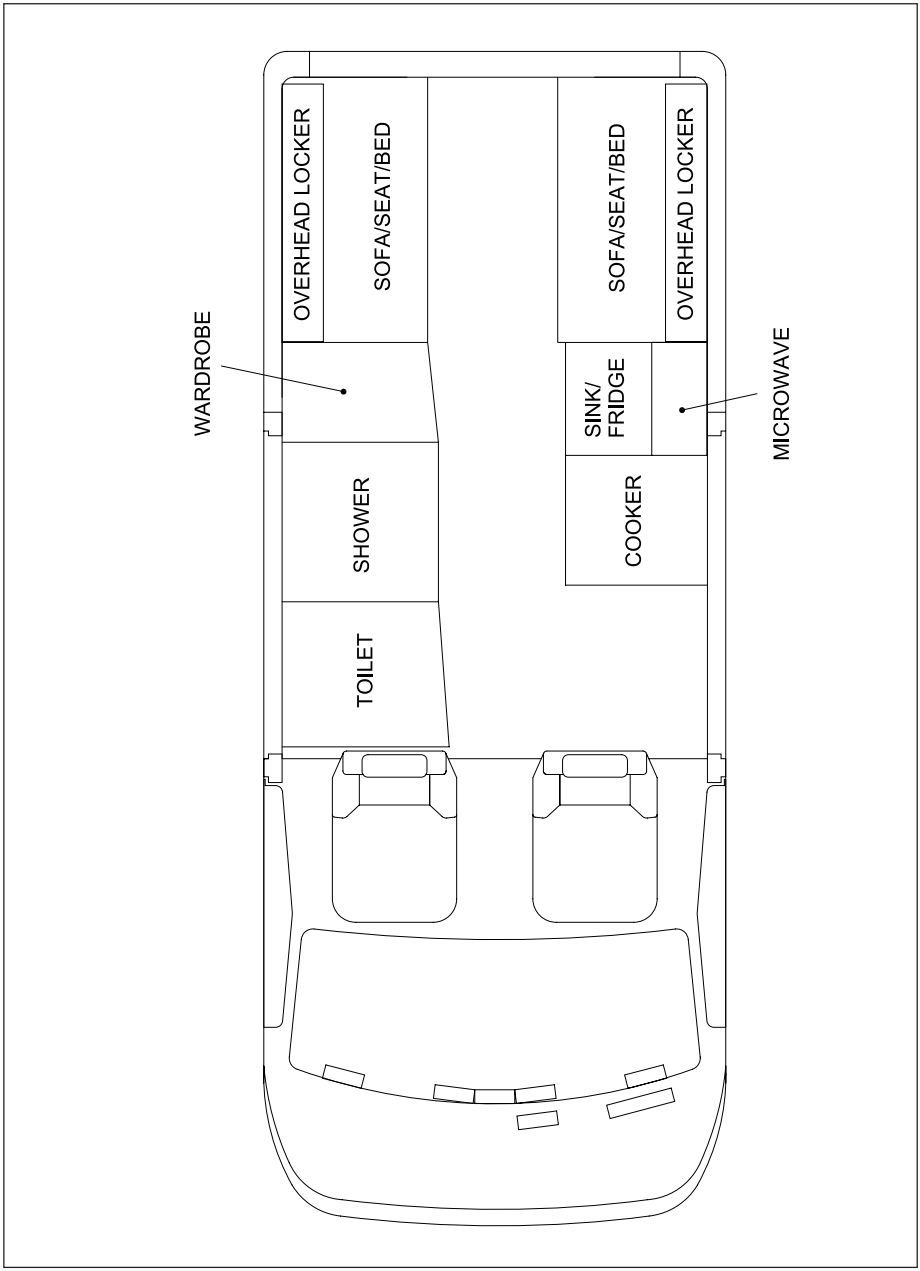

individually switched LED light in the roof.

The shower compartment, with a bi-fold door, incorporates a built in basin with a chrome mixer tap which has a removable spout which can be hooked into a higher wall fixing to be used as a shower. The shower side panel incorporates storage areas above and below the basin. In the roof is a ventilator with hinged fly screen and blind, along with another individually switched light. There is a blown warm air duct situated near the floor, and a plastic mat prevents damage to the shower tray when not in use.

Wardrobe

The wardrobe, with hanging rail, is situated adjacent to the bathroom, and has two storage drawers, and a cupboard fitted below it. The electrical control box is fitted to the rear wall of this cupboard.

Lounge Area

The lounge area is located at the rear of the vehicle and comprises a pair of inward facing sofas. The seats have slatted bases which lift up to provide access to the underseat storage. (In order to make lifting the seat base easier it is recommended that the backrest is first laid flat against the seat cushion). Access to the nearside underseat storage is also provided by a dropdown door in the sofa front panel.

The underside of the offside sofa houses various items of fitted equipment, and is not suitable for other storage. One of these items is the Truma Combi water and space heater, powered by LPG or mains electricity, with the control units located on the lounge side of the wardrobe. The mains electricity isolation switch for the Combi heater is located on the wardrobe side panel adjacent to the battery, and the red gas isolation tap is nearby. (For explanation of the symbols on these taps, please refer to page 7-8). The FrostControl water safety/drain valve is located on the floor, and a 230V socket and a blown warm air outlet are fitted to the front panel.

Lighting throughout the vehicle is provided by LED lights, all individually switched. There are two large round lights in the main area, with five downlighters in the lounge ceiling and four spotlamps fitted to the underside of the overhead lockers.

A carbon monoxide alarm is fitted near the ceiling on the wardrobe side panel, while the controls for the space/water heater are fitted lower down, together with a 12V socket.

A flat screen TV, if specified, is fitted to a pull out mounting on the lounge side of the wardrobe.

Storage

Storage is provided by the cupboards, lockers and within the settee bases. Additional storage is available in the overcab locker.

Heavy items must not be stored in any overhead locker, nor in any storage area from which they could come free and cause injury to the occupants of the vehicle. Ensure all cupboards are securely fastened before moving off (i.e. that the push buttons are in the ‘locked’ position).

Ensure any articles stowed below the cab seats will not come loose when the vehicle is being driven.

LOCATION OF KEY FACILITIES	
Control/thermostat for Truma Combi space heater	On lounge side of wardrobe
Electric step switch	On end of kitchen adjacent to entrance door
Fuses, 12V DC	On electrical control unit front panel
Gas control for Truma Combi water heater	On lounge side of wardrobe
Gas isolation taps	Cooker: Behind pan drawer under cooker Heater: Under offside sofa adjacent to heater
Halogen reading lights	Under overhead lockers in lounge area, all individually switched
Miniature Circuit Breakers (MCBs)	On electrical control unit front panel
Mains electrical switch for Truma Combi water/space heater	Under forward end of offside sofa
Main 12V control panel	On panel above side door
Main 12V switch for lighting	Control panel on panel above side door
Radio isolation switch	Not available with modern vehicle wiring
Radio rear speakers	In rear ceiling, volume may be balanced side to side
Residual Current Device (RCD)	On electrical control unit front panel
Safe	Not fitted
Smoke alarm	On ceiling above entrance door
TV aerial socket	None. TV and aerial are standard fitment
Water heater safety / drain valve	Under offside sofa
Water pump / Filter	Inside the freshwater tank
12V DC socket	On lounge side of wardrobe
230V sockets	1 off on front panel of offside sofa 1 off on end of kitchen unit adjacent to door 1 off on lounge side of kitchen unit

SLEEPING ARRANGEMENTS

Transverse double bed

Slide out the seat base of each inward facing sofa until they meet in the middle of the vehicle. Use the backrest cushion of each sofa to fill the space created between the base cushion and the side of the vehicle.

NORMAL SEATING ASSEMBLY (STRATFORD)

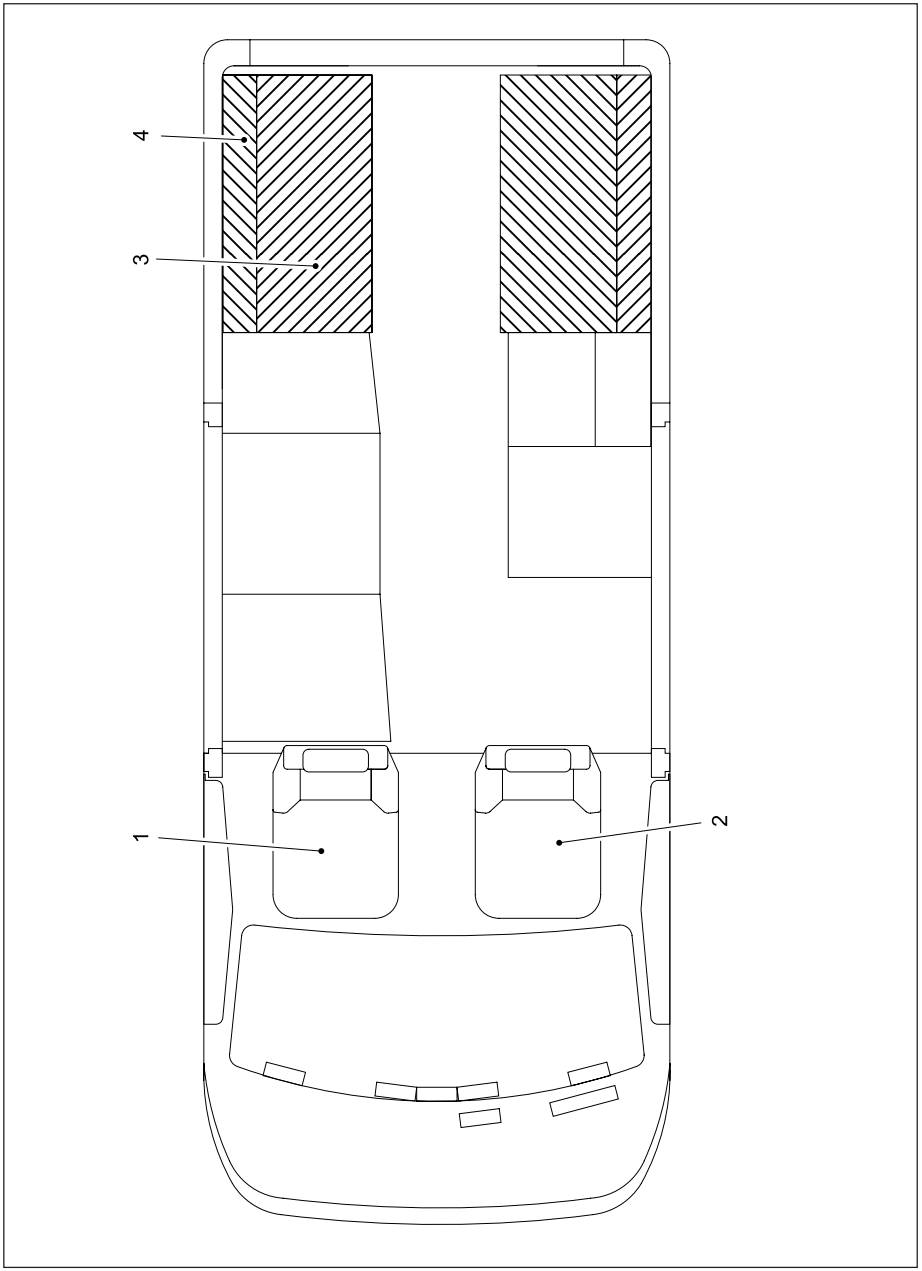

DOUBLE BED ASSEMBLY (STRATFORD)

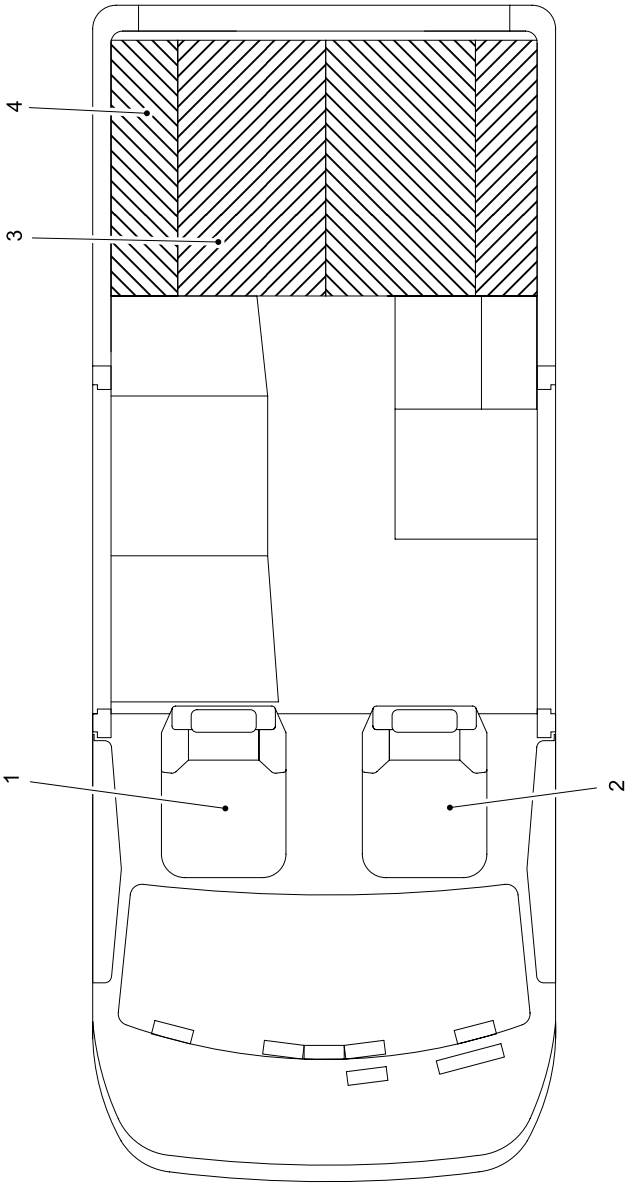

PARTS LIST (STRATFORD)

Item	Part No	Description/Cushion type	Qty	Notes
1	CS0161	CABSEAT RH	1	-
2	CS0161	CABSEAT LH	1	-
3	CS0347	BENCH CUSHION	1	-
4	CS0347	BACK REST CUSHION	1	-

EQUIPMENT ARRANGEMENT

Ventilation

Your vehicle is fitted with three roof ventilators. A large Remis one is located above the lounge area with a Seitz Mini Heki fitted as standard above the kitchen area. A Remis ventilator with an electrically operated extractor fan is available as an option in this position.

There is a small MPK roof ventilator in the shower compartment.

Remis Roof Light

The Remis roof lights are operated by a rotating handle which means they can be opened to any required position. They incorporate a separate sliding flyscreen and night blind which can operate even if the ventilator is left open.

Mini-Heki Roof Light

To operate the Mini-Heki roof light, press the button and pull the handle to raise the cover. Use the slotted channels to hold the roof light open in the desired position.

MPK Roof Light

The MPK roof light is fitted with a hinged cover which incorporates a roller blind and a fixed flyscreen. Opening the hinged cover gives access to the adjustment handles for the five way opening facility. Grasp the handles and push upwards to fully open or tilt in the required direction.

When the vehicle is being driven the roof ventilators should be fully closed. Wind noise may be reduced by closing the night blind.

The roof ventilators are designed to flow a certain amount of air even fully closed. Do not obstruct them - your safety depends on them.

Insulation

All body panels, except the front doors and engine bulkhead, are insulated using fibreglass insulation material, giving protection against extremities of hot and cold, and, at the same time, minimising condensation.

Stainless Steel Sink and Drainer

The stainless steel sink and drainer should only be cleaned with light detergent. Under no circumstances should bleach be used since this will react adversely with the stainless steel and may cause small holes in the metal. Immediately beneath the sink is a slide-out cutlery drawer. The chrome mixer tap has a small rubber end cap to eliminate water droplets marking the work surface whilst in transit. A waste bin is incorporated beneath the sink unit with a stainless steel spice rack fitted on the adjacent wall.

Habitation Battery

This is located beneath the sofa on the offside of the vehicle. The battery is a 110AH 12V, low maintenance, leisure battery which sould only require attention at the annual habitation service.

If a replacement habitation battery should be required then it is important that the replacement be of the same type and specification as that originally fitted.

WARNING: Switch off all appliances and lamps before connecting or disconnecting the habitation battery.

Electronic Control System/Battery Charger

A Sargent EC155 Power Control System is fitted. It features a built in battery charger, an LED control panel to provide intelligent control of the 12V equipment and built in over-discharge software to protect the batteries. For a full description of this unit including operating instructions and fault finding, refer to the Connection of Services section.

Electrical - General

The 230V AC sockets fitted to your vehicle are suitable only for medium demand components such as televisions and hairdryers. Safety/overload protection is provided by the MCBs in the electrical control box. A further 12V socket is also provided.

An EM50 electrical interface adaptor box is located on the bulkhead behind the driver's seat. This contains fuses and relays for systems connected directly to the base vehicle electrical system, and these are unlikely to require attention from the owner.

The mains hook up cable is provided as standard with your vehicle, and should be kept neatly coiled in a safe place so as not to damage the plugs.

A strip LED awning light is provided above the side entrance door.

Factory Fitted Options

The following optional items are available at the time of build:

- Cycle rack.
- Awning.

Retrofit Options

Whilst this list is not comprehensive, below are listed suitable retrofit options. Contact either your local Auto-Sleeper dealer or the Motorhome Service Centre, Willersey for further details.

- Cycle Rack. The Fiamma 200D or 200DJ is recommended for fitment to the offside rear door.
- Top Box. A specific top box is not recommended because of the small amount of suitable space available on the roof. If a box is fitted it should be bolted through the roof, and the weight of it and its contents must not exceed 50kg.
- Air Conditioning. The Dometic B1500S is recommended for air conditioning in the habitation area.
- Back Box. The Fiamma Ultrabox 180 or 320 would be suitable, and is fitted to the cycle rack.
- Rear Ladder. The Fiamma Deluxe 6 DJ may be fitted to the nearside rear door to combine with the 200 DJ cycle rack.
- Towbar. The standard Peugeot towbar is recommended.

GENERAL

In order to keep your Auto-Sleeper in first class condition, periodic maintenance will be required to both the bodywork, windows, upholstery and other parts of the conversion. This maintenance should be carried out as follows:

Servicing

Servicing of the conversion is the responsibility of your local franchised Auto-Sleeper dealer to whom all queries should be referred. Your local base vehicle commercial dealer should carry out servicing of the base vehicle.

GLASSFIBRE BODYWORK AND ACRYLIC WINDOWS

General Cleaning

At regular intervals, you should wash the fibreglass bodywork with a recognised cleaner for use on fibreglass gel coats. Should marks remain, use a cleaner with chemical and abrasion agents formulated for use on gel coats.

Discolouration

Fading or discolouration of the gel coat is a natural ageing process caused by ultraviolet light. To overcome this, use a mild abrasive, which removes a thin layer of the discoloured surface. This will restore the bodywork to its original colour and surface lustre. Since discolouration develops gradually, it should not be necessary to carry out this procedure more than every three years. Frequent use of abrasive materials can reduce the thickness of the gel coat, to a potentially harmful extent.

Removing Scratches from Bodywork

Scratches can be removed from both gel and painted surfaces. The method depends upon the depth of the scratch, as care has to be taken to avoid penetrating the paint or gel coat. Very fine, hairline scratches can be removed by rubbing across the line of the scratch with rubbing compound. Slightly deeper scratches should be lightly wet sanded first using very fine (1200 grit or finer) abrasive paper. Rubbing compound will then remove the flatting marks created by the abrasive paper. For deep gouge type scratches, where the paint or gel may have been penetrated, you should first seek the advice of your supplying Auto-Sleeper dealer.

Removing Scratches from Acrylic Windows

All windows, except the chassis cab and Luton, are manufactured in acrylic. Over time these become scratched and their clarity impaired. An Acrylic Window Polish removes unwanted scratches and blemishes leaving a clear, haze free finish. Minor scratches can be polished out directly.

Recommended Materials

G3 Paste Compound: This is a cutting compound and polish, recommended for use on painted surfaces and GRP. It is ideal for removing the traffic film that builds up on glassfibre coachwork and not only restores it to its former glory, but adds a high level of polish as well.

G10 Extra Fine Grade Liquid: This is again ideal for polishing surfaces and removes swirl marks and very fine scratches. It is less abrasive than G3 yet has the same polish properties and cleans and restores discoloured surfaces. It is ideal for use on dark colours.

Black Top Hand Glaze: This is ideal for use on stains, vinyls, body mouldings and provides a long lasting high gloss finish. It is resistant to car wash and abrasive solvents and is easy to apply. Economical in use, only a small amount is needed to give a very fine finish.

Finishing Cloths: These are very fine grade cloths, woven and thus easily washable that are recommended by Farecia for use with their materials.

The above can be purchased from our Service Centre, Willerly (01386) 853511.

UPHOLSTERY MAINTENANCE

Cleaning

Upholstery should be brushed or vacuumed regularly. Fabrics should be wiped every six to eight weeks with a lint free cloth and fabric cleaning fluid. Velour materials may be dry-cleaned.

Fabric Care

Fabric snags caused by sharp objects such as toys, nails, etc., should be trimmed off immediately. Never attempt to pull them off since this could cause the snag to run.

Whenever possible, avoid exposing the upholstery to direct sunlight which might eventually cause the colour to fade.

Fabrics with a velour type pile finish will develop crush marks in use - this is unavoidable and does not affect the quality of the product in any way.

Stain Removal

A proprietary dry cleaning fluid will remove most household stains. However, stubborn stains, such as coffee, wine or ice-cream may need pre-treatment with a mild soap and distilled water.

Small marks in velour type fabrics can usually be removed by stroking along the pile using a small brush and warm water.

We strongly recommend that before commencing any treatment an inconspicuous piece of material is tested for colourfastness and shinkage. If in doubt, please contact a professional dry cleaning company. Do not apply cleaning solvents to velour piping, otherwise the flock will be removed.

Work Surfaces

Laminated work surfaces are fitted to the tops of all furniture units. Whilst these are hard wearing, hot pans should not be placed directly on these surfaces, since damage may result.

STAINLESS STEEL COMPONENTS

External

In the event of discolouration of the stainless steel ladder, this should be removed with T-Cut or any other mild abrasive and the surface protected with WD40 or a similar product.

Internal

Do not clean stainless steel fittings, i.e. splash plate and sinks with bleach since this reacts with the stainless steel and may lead to corrosion.

Furniture

Furniture should be cleaned with a proprietary furniture polish periodically. Any watermarks that may occur on the hardwood edging of the furniture units should be removed by use of fine grade wire wool and furniture wax.

Heavy stains may need to be sanded out and the edging re-polished with a proprietary varnish (Ronseal etc.). The high gloss finish is achieved by using wire wool and wax.

GAS INSTALLATION

All gas vents and flue pipes should be periodically checked for damage and should be kept free from dirt.

Blocking of vents or flues is extremely hazardous and should be avoided at all times.

Gas Appliance Igniters

It is advisable, periodically, to check visually the igniters on hobs, grills and ovens are sparking correctly.

Annual Inspection

The gas installations should be inspected annually by qualified personnel. If in doubt contact your supplying Auto-Sleeper dealer. Modifications to the gas systems should not take place unless carried out by qualified technicians.

SEAT RESTRAINTS

WARNING: In the event of any impact of 25 mph or over in which seat belts have been worn, they must be replaced before the vehicle is used again.

WATER SYSTEM

Fresh Water Tank

At regular intervals, and at least every three months, the fresh water system should be flushed through with fresh water. Furthermore it is advisable that prior to using your Auto-Sleeper, the fresh water system is thoroughly flushed with fresh water.

Waste Water Tank

Since the waste water tank can hold foreign matter, it should be regularly flushed with fresh water. To prevent odours working back through the shower and sink outlets, flush the waste tank through with a small amount of mild disinfectant.

Depending on the use of the waste tank, it is possible that this will collect solid waste matter, which in some instances may build up and block the waste tank outlet tap. In this case it will be necessary to drop the tank for cleaning. Access is through a large diameter fitting in the tank top. Once removed this will allow the tank to be flushed out in an inverted position and all solids removed.

WINTERISATION

General

This section contains information on the winterisation of your Auto-Sleeper, particularly when you may wish to lay up your vehicle for the winter months.

Water System

The water system should be fully emptied and the drain taps on both the fresh water tank and waste water tank left in the open position. Likewise, all internal taps should be left open and the water pump run until the last traces of water have come out of the taps. Purely as a precaution, against very severe freezing conditions, the water filter that is attached to the water pump on the outlet side should be removed and cleared of all water. In doing so it will give you the opportunity of cleaning it, if necessary, ready for the coming season. Remove all sink plugs to allow the water system to breathe.

Flush fully the waste water tank to remove any excess debris and waste material. Flush through again with disinfectant as part of the final drain. Leave drain tap open.

Upholstery

We advise that any detachable upholstery is removed and taken indoors during prolonged winter storage, particularly detachable upper bed mattresses and scatter cushions.

Curtains/Blinds

To prevent uneven bleaching, and possible excess sunlight onto the furniture and fabrics, we recommend that either the curtains or blinds are left drawn.

Refrigerator

Leave the refrigerator door open, on its intermediate lock position; this will allow the refrigerator to breathe and prevent any unpleasant odours in the storage department.

Ventilation

There is fixed upper and lower ventilation in your Auto-Sleeper which is built-in in the interests of safety. There is therefore no need to leave any windows or roof ventilators ajar -

indeed the roof ventilators have sufficient fixed ventilation to allow the interior of the vehicle to breathe satisfactorily.

Exterior

Fit, where appropriate, the Electrolux winter covers to the fridge ventilators. Give your Auto-Sleeper a good wash and polish before laying up, and apply a small film of protective oil to the stainless steel roof rack, ladder and any other external polished metal components.

Electrical

Turn the electrical system off at the control panel.

Peugeot recommend that if the vehicle is to be parked up for a period of more than one month then it is advisable to disconnect the main vehicle battery. For full instructions on the correct procedure refer to the Peugeot handbook supplied with the vehicle and look for the section covering the battery. If this advice is followed, bear in mind that the remote central locking will not function, although it will still be possible to unlock and lock the doors manually using the key.

To maintain the vehicle battery in good condition it is recommended that it is fully charged prior to storage and then recharged every 3 months.

Windows

Open all windows fully. Check all window seals are intact and shut firmly. Ensure locks and over centre catches are applied as appropriate.

Automotive

Follow the advice laid down by the base vehicle manufacturer. In particular,

- Secure the vehicle using chocks. Release the handbrake to prevent the brake linings from seizing on.
- **Increase the tyre pressure (by approximately 2 bar above the standard pressure) to prevent the tyres from becoming flat.**

  WARNING: Do not exceed the maximum pressure noted on the sidewall of the tyre.

  Alternatively, jack up the vehicle to relieve the load on the tyres.
- Cover the tyres to protect from sunlight, as they will deteriorate rapidly in ultra-violet light. A light proof cover will help to prevent cracking of sidewalls and premature ageing.
- Check coolant for antifreeze protection, correct as required.
- Check windscreen and headlamp cleaning systems for antifreeze protection, correct as required.

TROUBLESHOOTING

The following are a series of fault finding charts to which you should refer in the event of problems you may have regarding 230/12V, LPG and water. This should be used as a guide only, and in the case of an electrical fault, where a fuse has blown or an MCB tripped out, the fault must be located before replacing the fuse. If a fault is suspected with the LPG system, consult a CORGI registered technician.

If in doubt consult a qualified technician or your local Auto-Sleeper dealer.

12V TROUBLESHOOTING CHART

Symptom	Cause	Remedy
Habitation 12V does not operate	Main 20A fuse blown	Check/Replace
	Battery Discharged	Recharge
	Switch on control panel in off position	Switch to on
	Vehicle ignition 'on'	Switch 'off' ignition
Habitation battery not charging	Main 20A fuse blown	Check/Replace
	Relay fault	Refer to dealer
	Contacts dirty/loose on battery terminals	Clean and check for tightness
	Poor earthing	Check earthing to chassis point
Battery does not hold its charge	Failed battery	Check cells with hydrometer change electrolyte if necessary
	Current being drawn	Check all appliances are off when not in use
Battery discharges over a short time with appliances operating	Poor battery cell condition	Check cells with hydrometer
	Failed battery	Change battery
	Battery not fully charged	Fully recharge battery
No power to one or more 12V appliances	Circuit fuse blown	Find fault and replace fuse with same rating
Lights dull/only one tube illuminating	Low battery charge	Check battery
	Faulty light unit/tube	Replace/Check
Water pump not operating	Switch on panel 'off'	Switch it 'on'
	Pressure switch on pump not operating	Refer to dealer
	Fuse 4 blown	Find fault and replace fuse with same rating
No power on 12V socket outlet	Fuse 9 blown	Find fault and replace fuse with same rating
	12V plug incorrectly connected/wired	Check plug

12V TROUBLESHOOTING CHART (continued)

Symptom	Cause	Remedy
Water Heater not operating/cuts out	Fuse 11 blown	Find fault and replace fuse with same rating
	Low battery charge	Recharge battery
	Unit fault	Refer to dealer
Cooker ignition not operating	Fuse 11 blown	Find fault and replace fuse with same rating
	Spark unit fault	Refer to dealer
	Fault on cooker unit	Refer to dealer
Fridge gas ignition not operating	Fuse 11 blown	Find fault and replace fuse with same rating
	Ignition control switch fault	Refer to dealer
Fridge ignition switch flashes but gas does not ignite	Fault on fridge unit	Refer to dealer
Ignition can be heard to be sparking but no flashing on fridge switch	Faulty fridge ignition switch	Refer to dealer
Fridge does not operate on 12V when engine is running	Fuse 3 blown	Find fault and replace fuse with same rating
	Fuse 7 in EM50 interface box blown	Find fault and replace fuse with same rating
	Fault on fridge relay	Refer to dealer
	Fault on fridge unit	Refer to dealer

230V TROUBLESHOOTING CHART

Symptom	Cause	Remedy
230V system inoperative	No site power	Check site supply
	RCD/MCB switches tripped out	Reset circuit breakers
RCD/MCB keeps tripping out	Fault on 230V supply	Check supply including polarity
	Faulty appliance	Turn off all appliances, reset circuit breakers, turn on appliances until fault occurs. Isolate faulty appliance
	Overload on current consumption by appliance	10A maximum available do not use appliance
Water heater does not operate on 230V	No power	Switch on isolator switch/ check MCB is on
	Overtemperature trip activated	Reset thermal cut-out (refer to operating instructions)
Battery charger does not operate	Charger switched off	Switch on at control box/ check MCB is on
Refrigerator does not operate on 230V	Switch on refrigerator thermostat dial not ‘on’	Check position of thermostat dial
	Element fault	Refer to dealer
Cooker Hotplate not heating up	No power	Check MCB is on

LPG TROUBLESHOOTING CHART

Symptom	Cause	Remedy
Appliance will not light	No gas	Check isolation valve is open
	Low battery (auto ignition)	Charge battery
Appliance lights but goes out immediately the FSD override is released	Flame supervision device (FSD) is not functioning correctly	Refer to dealer
Odour	Gas leak	Turn off the gas at the isolation valve and do not use the gas system until the problem has been rectified
Yellow flame	Lack of primary air. please note yellow tipping to the flame is normal	Refer to dealer
Orange flame	Particles of dust or dirt in the mixing tube being carried through the burner ports	Reduce the amount of dust in air
	Burner ports partically blocked	Refer to dealer
Floating flame	Lack of secondary air	Check all vents are clear (air inlet to vehicle)
	Blocked retention ports	Check retention ports are clear
	If in an oven	Check the flue way is clear

WATER TROUBLESHOOTING CHART

Note: For more help with water pump issues, please refer to page 7-3 of this handbook.

Symptom	Cause	Remedy
Continuous running of water pump	1. No water	1. Fill tank
	2. Major leak	2. Switch off immediately and check system
Intermittent operation of water pump	Minor leak in water system	Check push fit joints
	Water pump pressure release valve reasserting itself	No action - part of pump design
Water pump does not operate	Fuse 4 blown	Find fault and replace fuse with same rating
Water gauge does not operate	Probe fault	Refer to dealer (check probe connections)
No hot water (mains system)	Water heater tripped	Check and press re-set button
No hot water (gas system)	Gas module not lighting Igniter not working	Refer to dealer Check 12V switched on
Slow drainage from sink/shower tray	Blocked breathers in waste tank	Drop tank and clear breathers
Tip-up handbasin slow to drain	Blocked drain hole	Remove basin and clear
Unsatisfactory operation of water pump	Filter blocked	Clean filter

DATA RECORD

We suggest that you record key details in the spaces below should you accidentally mislay your keys or other vital documentation.

Vehicle Type .....

Vehicle Model .....

Auto-Sleepers Production Number .....

Keys .....

Ignition Key .....

Door Key (if applicable) .....

Fuel Filler (if applicable) .....

Water Filler .....

Gas Compartment Key .....

Toilet Compartment Key .....

Alarm Code (if fitted) .....

AA/RAC/etc. Membership Number .....

Radio Security Code .....

Supplying Dealer Contact Number .....

AUTO-SLEEPER DEALERS

To find your nearest Auto-Sleepers dealer please go to www.auto-sleepers.co.uk and click on ‘Find a Dealer’.

RECOMMENDED ANNUAL SERVICE CHECK FOR MOTOR CARAVAN BODIES AND CONVERSIONS

It is recommended that the annual service is carried out by an approved motorhome service centre.

Introduction

This entire section offers guidelines for the checking of a motorhome's habitation area and to ensure continual compliance with EN1646-1.

It does not cover any part of the base vehicle, although there may be minor overlapping (such as tyre pressures, cab seats, internal lights, battery and windows) in a van conversion. The base vehicle must be serviced in accordance with the chassis manufacturer's instructions.

Reference should also be made to:

- Any owner's manual or equivalent supplied with the vehicle by the motorhome converter.
- Appliance manufacturer's instructions.
- Driver's handbook or equivalent supplied by the chassis manufacturer.
- A vehicle is accepted for service at the dealer's discretion.
- Any defects, repairs, adjustments, cleaning or lubrication required will be noted on the checklist. The customer's approval will be obtained before any work is done.

Not all of the equipment mentioned in this manual is fitted as standard to every motorhome.

This guide is published as an aide memoire for dealers. Any work carried out following the check, and the sufficiency of the work in the check itself, is subject to the contract between the customer and the dealer.

SECTION 1 - BODY MOUNTING

Body to Chassis

Examine all fixings retaining the body to the chassis - this may be direct or through a sub-frame. Where practical, all fittings should be checked to ensure they are all present and correctly secured.

Body to Cab

Examine joint between body and cab for signs of movement and soundness of sealing media.

Body Retention (dismountables)

Check serviceability and tightness of body retaining gear.

Check serviceability of body support struts and mountings. (Note: whether it will be necessary to demount the body to check the body supports must be agreed between dealer and customer).

SECTION 2 - WINDOWS

Windows

Check window glazing rubber or sealing for cracks and general condition. Check for satisfactory operation and closing.

Check fixing of top hinge rail on top hung windows.

Check for good weather seal when window is closed and latched.

Check catches and stays for satisfactory operation.

SECTION 3 - DOORS

EXTERNAL DOORS

Not including base vehicle doors.

Security:

- Check that hinges and catches are satisfactory and that, when latched, doors are held securely shut.
- Check that the keys or internal latches lock the doors correctly.
- Check that any device fitted to hold a door in the open position is satisfactory.

Sealing:

- Check all door seals for cracking and general condition.
- Check correct closing to give a weather-tight seal.

Childproof Lock:

- Where a door is fitted with a childproof lock check that an appropriate warning notice is fixed adjacent to the door. Appropriate warning notices are available from motorhome manufacturers.

INTERNAL DOORS

Security:

- Check that hinges and catches are satisfactory and that, when latched, the door is held securely shut.

Safety:

- Check that any device fitted to hold a door in the closed position can be operated from both sides to open the door in an emergency.

SECTION 4 - ATTACHMENTS TO CHASSIS OR UNDERBODY

Corner Steadies

Check that attachments to chassis are secure.

Ensure steadies work freely and satisfactorily.

Lubricate screw to ensure correct operation.

Folding/Retractable Steps

Check that step pivots are satisfactory and not worn. Check that, when closed, the retaining mechanism holds the step securely. If fitted, check device is working.

Underfloor Water Tank Mountings

Check mounting frames are secure to body. Any fastenings that require releasing to remove the tank should be free of rust and operate freely. (Removal, flushing, cleaning and replacing of tanks will be carried out at the prior request of the customer or will be done subsequently with other work).

Spare Wheel

Remove spare wheel. Check for damage. Check typre pressure.

Check mounting frame for security to body and for secure retention of spare wheel.

Wheel Boxes

Check for damage, corrosion, water seepage, signs of tyre scrubbing.

SECTION 5 - ATTACHMENTS TO BODY EXTERIOR

Roof Lights

Check security, general condition, and that sealing has not deteriorated.

Roof Racks and Ladders

Check security to body and general condition.

Check roof for damage adjacent to rack.

Mouldings, Trims

Check security. Check sealing has not deteriorated.

Flue Terminals, Air Vents

Check security. Check sealing has not deteriorated.

Check that these are not blocked.

SECTION 6 - INTERNAL

Body Seepage Check

Examine for moisture/water staining of areas under windows, at side of roof and at corners, which could indicate water seepage problems. A moisture meter should be used where appropriate.

Furniture

Check furniture is securely fixed.

Check door hinges, catches and stays for satisfactory operation.

Dinette Seats/Beds

Check seat bases for security of fixings and for damage.

Make up beds according to manufacturer’s instructions and check for rigidity and safety.

Upper Bunks

Check there is a secure means of access to upper bunks and that, where applicable, protection against falling out and entrapment is provided.

Curtains/Blinds/Nets

Check track is secure and curtains draw freely without snagging.

Check blinds and/or nets for correct operation.

Check flyscreens in roof lights and air vents.

Cab Seats

Where cab seats form part of the living area and/or bed layout they should be checked for security of attachment, smooth and easy operation of seat slides, swivels and seat back operation.

Fire Extinguisher

Check condition and expiry date. If an extinguisher is not fitted, inform the customer of the advisability of such equipment

Fire Blanket

Check position (should be near cooker).

If one is not present, inform the customer of the advisability of such equipment.

Advice to Occupiers/Warning Notice

Check presence and condition and advise customers accordingly.

The wording and layout of the notice should be set out as follows:

ADVICE TO USERS

VENTILATION

Do not obstruct the ventilators which are fitted; your safety depends on them.

IN CASE OF FIRE

1. Get everyone out.
2. Turn off outside gas valve and/or oil valve (if fitted).
3. Disconnect the mains electricity supply.
4. Raise the alarm and call the fire brigade.
5. Tackle fire if safe to do so.

FIRE PRECAUTIONS

Children: Do not leave them alone.

Means of Escape: Make sure you know the location and operation of the emergency exits, keep all escape routes clear.

Combustible Materials: Keep them clear of all heating and cooking appliances.

Fire Fighting: Provide, at least, a 1kg power fire extinguisher, that complies with BS5423 by the main exit door, and a fire blanket next to the cooker. Make yourself familiar with the instructions on your fire extinguisher and the fire precaution arrangements on the caravan park.

Portable or Open Flame Heating Equipment

Check for its presence. The customer must be advised against its use.

SECTION 7 - ELEVATING ROOFS

Solid Side Wall

Check sides and end panels fold up and down correctly, that they seal against each other where appropriate and that retaining mechanisms are satisfactory. Check all hinges for security and freedom from strain.

Locking of Roof

It is important to ensure that, when the roof is in the travelling position, it is safely and positively locked down. Any locking retaining mechanism should be carefully examined.

SECTION 8 - GAS SYSTEMS

Cylinders, Regulators and Feed Hoses

Establish that the cylinder and feed hose is compatible.

Since the introduction of BS EN1949 the gas pressures for Butane (blue) cylinders and propane (red) cylinders have been harmonised across Europe. The gas system pressure is now 30mbar for both gases.

The gas regulator is now fitted as standard equipment by Auto-Sleepers. Your supplying dealer will need to supply you with the correct hose compatible with the cylinder to be fitted.

Check cylinder compartment vents and gas drop hole in floor are free from obstruction.

Check seals on internal doors.

Hose and Piping

Check any flexible hose is of an approved type. Check its condition and any evidence of cracking.

The maximum permissible hose length is 400mm, longer hoses should not be used. The hose length is the length of the flexible portion of the hose assembly. Do not use external cylinders and or extension hoses.

Check piping for condition, damage and correct support.

Carry out an overall leak test.

Appliances

In general, the checking of gas appliances can be divided into the following:

1. Cleaning.
2. Operation of controls.
3. Correct flame structure.
4. Flues.
5. Flame failure device.
6. Security.

Cleaning

- Where apprpriate, remove cover(s) to gain access to heat exchanger. Clean away any fluff or foreign matter. Reassemble and test. Clean flame viewing window.

Controls

- Check that all knobs etc. work smoothly and are secure on their spindles. If gas taps require greasing to ease stiffness, use only approved LPG grease. Check that appliances can be brought into service using the normal controls.

Correct Flame Structure

- Check that all pilot flames burn quietly and clearly.

Refrigerator: With the refrigerator gas control turned to maximum, the colour of the flame should be predominantly blue.

Instantaneous Water Heating: The main burner flame should be of even height and blue in colour. A flame burning yellow will allow sooting to occur.

Ovens: The oven flame should burn quietly and be of even height, mainly blue/green in colour. If the gas is propane, the flame will normally develop yellow tips as the burner heats up. If the gas is butane, a small amount of yellow tipping will be seen immediately after lighting, increasing as the burner heats up.

Grill Burners: It is normal for the flames on this type of burner to develop yellow tips as it heats up, particularly on butane.

General: A flame lifting away from the burners is an indication of too high a

pressure, although it may happen with grill burners whilst the frets are heating up. A yellow flame will cause sooting and is an indication of too low a pressure. Providing the regulator and piping have been checked and found satisfactory, the above faults should not appear.

Flues:

- Flues should be examined for security of fixing and for correct attachment to appliances and flue terminals. They should be free from damage and corrosion. Check for leakage of flue gases into the vehicle.

Flame Failure Device (FFD):

- Where fitted, FFD should be checked to ensure satisfactory operation. After the appliance has been successfully checked, allow time for the thermocouple to cool. Attempt to relight the appliance by turning it on wihtout pushing in the gas control knob. (Do not override the FFD). If appliance does not light, FFD is satisfactory.

Security:

- Check appliance is securely fixed to the vehicle/furniture and will be free from rattles. Where applicable, check that water pipes are satisfactorily attached with no sign of leakage.

Protection of adjacent surfaces:

- Check that surfaces adjacent to open flame cooking appliance have adequate protection.

Inspections:

- It is recommended that inspections are carried out by a qualified fitter trained to, for example, CORGI (Confederation of Registered Gas Installers) or Calor standards.

SECTION 9 - WATER SYSTEM

Before operating the water system, a visual check of the following items may show up an obvious leak source...

Fresh Water Tank

Check condition, fill tank and check for leaks.

Check the external filler and filler pipe to tank.

Check for satisfactory venting.

Check condition and presence of filler cap.

Waste Water Tank

Check drain tap is clear and working.

Check condition and presence of drain hose. (The water tank will be drained, flushed, cleaned and charged with a measure of toilet fluid/disinfectant at the prior request of the customer).

Pump Filter

When applicable, remove filter and replace.

Check the in-line pump for security and condition. Remove the submersible pump from tank, check condition.

Check pump inlet and outlet are clear and not obstructed.

Check delivery hose and electric cable are secure and satisfactory.

System Check

Operate pump. Check all piping for leaks.

Operate taps and shower. If a hot water system is fitted, it can be checked for leaks etc., using cold water. (Note: Aerated water from tap could be due to a leak on the suction side of the pump).

Waste Water System

With water running through the drain pipes, check for leaks and satisfactory draining of water from sinks etc.

Couplings and Fluids

Check that the appropriate markings are used - blue for fresh water, grey for waste water. Ensure a sealing off cover is supplied for each coupling.

Check that filler positions are designated

"petrol", "diesel" or "water" as appropriate.

Toilet Waste Tank

Check that any fixed tank intended to receive discharge from a toilet is fitted with either a level or full indicator.

SECTION 10 - ELECTRICAL SYSTEMS

Extra Low Voltage 12 Volts (excluding vehicle)

Battery/ies:

- Check battery/ies for condition.
- Check connections, wires, fuses and relays appertaining to the habitation electrics.

Wiring:

- Examine all visible wiring.
- Check all connections and joints are sound and satisfactory.

Fuses/Fuse Holders:

- Ensure that fuses and fuse holders used to protect the habitation electrics are satisfactory and that fuse ratings are compatible with the circuit appliances being protected.

Appliances:

- Inspect all appliances for damage, signs of overheating and secure fixing. Function test all appliances.

Mains 230 Volt System

It is recommended that the inspection and certification of the 230 volt system be carried out by a qualified electrician who is an approved contractor of the NICEIC (National Inspection for Electrical Installation Contracting) or in membership of the Electrical Contractors Association 17th Edition Wiring Regulations.

SECTION 11- VENTILATION

High Level

Check all high level ventilators, including roof lights, are free from obstruction and allow a free flow of air.

Low Level

Check all low level ventilators are free from obstructions and allow a free flow of air. If the ventilator is manually adjustable then ensure the mechanism is free and operating correctly.

AUTO-SLEEPERS SERVICE CENTRE ANNUAL HABITATION CHECK

Introduction

It is recommended that every 12 months the habitation side of your motorhome is inspected by qualified technicians. Attached to this brief, is a list of all the points that are checked.

A few customers are of the belief that this check includes rectification of faults. It is stressed that this is not the case, the annual service is a check only of the habitation aspect of the motorhome.

If faults are found, the technician will advise you, the customer, of the fault and the recommended course of action to resolve this.

Servicing is not included in this check.

All facilities are run and tested through their operational envelope. For example, the flame propagation on the refrigerator and other main gas appliances (where visible) is checked. If the flame is burning a wrong colour or burning too far from the jet, we again advise you, the customer, as to how this should be rectified.

We also recommend and are only too happy to arrange for the refrigerator of your Auto-Sleeper to be checked here at the Service Centre by a qualified Dometic engineer. In this instance we call upon Leisure Appliances and Repairs of Hereford who come, by appointment, to carry out the necessary work.

The only component that is changed during the course of the annual check is the flexible gas hose, the hose that leads from the bulkhead fitting in the gas compartment to the gas regulator.

A further aspect of the test is a gas pressure test.

You will see also that we check that key components are serviceable (fire extinguishers etc) and furthermore that where appropriate, items are lubricated and checked for serviceability.

MOTOR CARAVAN ANNUAL HABITATION SERVICE CHECK

CHECK SHEET **CUSTOMER COPY**

Vehicle Reg. Mark
Make & Model
Year of Manufacture
Recorded Mileage

A Class
Coachbuilt
High top conversion
Elevating Roof
Dismountable

CHECK ITEM	Manual	OK	Remarks - Advice to Customers
SECTION 1: BODY MOUNTING			
BODY TO CHASSIS			
BODY TO CAB			
BODY RETENTION			
SECTION 2: WINDOWS			
WINDOWS			
SECTION 3: DOORS			
EXTERNAL			
INTERNAL			
SECTION 4: CHASSIS			
CORNER STEADIES			
FOLDING STEP			
WATER TANK MOUNTS			
SPARE WHEEL			
WHEEL BOXES			
SECTION 5: BODY EXTERIOR			
ROOF LIGHTS			
ROOF RACK AND LADDER			
MOULDINGS AND TRIM			
FLUE TERMINALS, AIR VENTS			
SECTION 6: INTERNAL			
SEEPAGE CHECK			
FURNITURE			
DINETTE SEATS/BEDS			
CURTAINS, BLINDS, NETS			
CAB SEATS			
FIRE EXTINGUISHER			
FIRE BLANKET			
WARNING NOTICE			
HEATING EQUIPMENT			

CHECK ITEM	Manual	OK	Remarks - Advice to Customers
SECTION 7: LIFT UP ROOFS			
LIFTING MECHANISM			
CANVAS SIDE WALLS			
SOLID SIDE WALLS			
LOCKING			
SECTION 8: GAS SYSTEM			
CYLINDERS & REGULATOR			
HOSE & PIPING			
APPLIANCES			
SECTION 9: WATER SYSTEM			
FRESH WATER TANK			
WASTE WATER TANK			
FILTER PUMP			
SYSTEM CHECK			
WASTE WATER SYSTEM			
COUPLINGS & FLUIDS			
SECTION 10: ELECTRICS			
12 VOLT SYSTEM			
BATTERIES			
WIRING			
FUSES, FUSE HOLDERS			
APPLIANCES			
MAINS 230 VOLT SYSTEM			
SECTION 11: VENTILATION			
HIGH LEVEL			
LOW LEVEL			

DEALER:	SIGNED: DATE:

DEALER STAMP DATE: / /	DEALER STAMP DATE: / /
DEALER STAMP DATE: / /	DEALER STAMP DATE: / /
DEALER STAMP DATE: / /	DEALER STAMP DATE: / /
DEALER STAMP DATE: / /	DEALER STAMP DATE: / /
DEALER STAMP DATE: / /	DEALER STAMP DATE: / /
DEALER STAMP DATE: / /	DEALER STAMP DATE: / /

INDEX